Repair Parts for

Gasboy Consumer Products

"because good things should last..."

SVI International, Inc.
155 Harvestore Drive • DeKalb, IL 60115

800-321-8173
815-748-0200
www.sviinternational.com

SERVICE SOLUTIONS • VALUE VISION • INNOVATION IDEAS

"because good things should last..."

Repair Parts for Tokheim, too!!

SERIES: 425 • 428 • 460 • 470 • 700

Tokheim—See Gasboy:
787 = 1720
797 = 1520
797-T = 1520-T

NOTE: If your model # starts with a "4", remove the "4" and see our parts breakdowns inside. For example, **Tokheim 425**—see Model 25 for Gasboy.

SVI INC

Table of Contents

Model WD73 by SVI
115 Volt Electric HD Vane Pump **3**

Quick Reference for Gasboy / Tokheim.....4–8

Models 9–45
20 / 420 Series 9–18
60 / 460 Series 19–20
70 / 470 Series & 1800 Series.....21–32
Model 124 - Quart Stroke Pump.....33
300 Series 34
Slimline 390 Pump.....22–28
600 Series 35–37
1200 Series 38–42
Models 1520A / 1720A / 786 / 787 42
1620 / 1720 / 786 / 787 Diaphragm Pumps
and 1420 / 1520 / 1520T / 797 / 796 / 797-T
Piston Pumps 42–43
Accessories for Diaphragm and Piston Pumps 44
1700 Series - Repair Kit 45

Meter Register Assemblies.....46–54
3460 Meter Register.....46–47
1860 Meter Register.....48–50
4860 Meter Register.....48, 52–54

CHICAGO • LOS ANGELES
(800) 321-8173 • fax: (800) 899-1784
www.sviinternational.com

115 Volt Electric HD Vane Pump

Model WD73

"because good things should last..."

- **EXTRA-DUTY 1/3 HP MOTOR**
- **HEAVY DUTY HIGH SPEED 16 GPM PUMP**
- **TROUBLE-FREE HD STAINLESS STEEL BYPASS VALVE**
- **SEPARATE MOTOR AND PUMP FOR SUPERIOR DURABILITY**

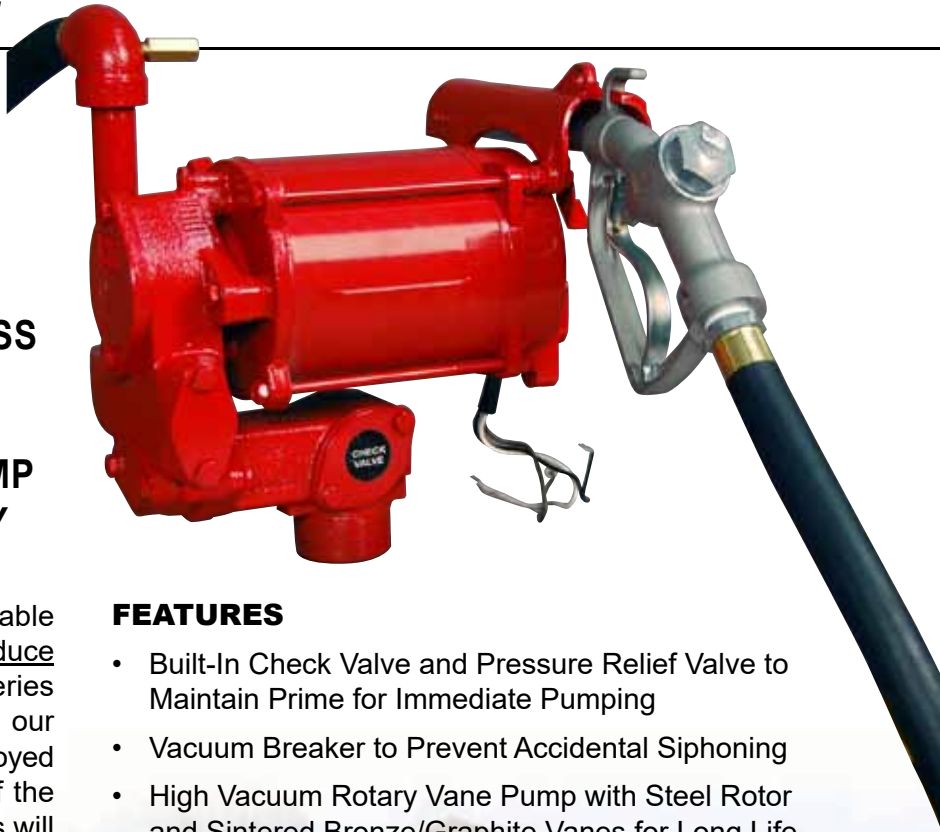

While virtually identical to the once-available Gasboy Model 73, SVI is pleased to introduce its new model **WD73**. This consumer series pump is now available and assembled in our DeKalb, Illinois plant. Everyone who has enjoyed the lifespan longevity and serviceability of the former Gasboy consumer 70 series pumps will experience the same results with this pump. The ***specifications are identical*** and the pump is priced right.

Put the boy back to work and order some WD73 pumps today. They come complete as pictured with the nozzle and fuel line. We also offer the ever-useful Install-A-Socket. There are two versions of this pump available, one for diesel and one for unleaded. Contact your favorite SVI representative to place your orders.

SVI #	DESCRIPTION	
WD73U	UNLEADED	3/4" X 12' HOSE
WD73D	DIESEL	3/4" X 12' HOSE
WD73D-1	DIESEL	1" X 25' HOSE
WD73D-HN	DIESEL	NO HOSE / NO NOZZLE

FEATURES

- Built-In Check Valve and Pressure Relief Valve to Maintain Prime for Immediate Pumping
- Vacuum Breaker to Prevent Accidental Siphoning
- High Vacuum Rotary Vane Pump with Steel Rotor and Sintered Bronze/Graphite Vanes for Long Life
- Easy Access, 100 Mesh Strainer (40 Mesh Optional)
- Heavy Duty Stainless Steel Bypass Valve
- Explosion-Proof 1/3 HP, 1725 RPM, 115 VAC Motor with Thermal Overload Sensor
- Auxiliary Motor Switch Lead to Activate Electric Solenoid Remove-Mount Installations
- 12' (3.7 m) Hose with Integral Static Discharge Wire for 3/4" Hose Models. (25' for 1" hose diesel model)
- Manual Self-Closing Nozzle
- 2" (5.08) NPT Install-A-Socket (Optional) for Easy Mounting, Accommodates 1" (2.54 cm) NPT Suction Tube (Not Included). Install-A-Socket Eliminates Need to Install Pump with Suction Pipe Attached.

SVI International, Inc.

800-321-8173 • 815-748-0200

155 Harvestore Drive • DeKalb, IL 60115

www.sviinternational.com

Since 1977

All names, numbers, symbols and descriptions are used for reference purposes only. Entire contents copyright © 2022, SVI International, Inc. 11-07-2022

Entire contents copyright © 2022 SVI International, Inc.

Quick Reference for Gasboy / Tokheim

(OEM 032892)

For new style, order BP-4210-02N

BP-4210-02
Repair Kit - 20 Series (old style)

(OEM 032888)

BP-4210-01
Repair Kit for 1800, 70, 390

(OEM 032893)

BP-4211-03
Repair Kit for 60 Series

(OEM 054030 - OLD STYLE / M08781K001)

BP-4210-29
Seal Kit (old style) - 20 series

(OEM 054030 - NEW STYLE)

BP-4210-29N
Seal Kit (new style) - 20 series

(OEM 032867)

BP-4211-13
Seal Kit - 60 Series

(OEM #M05618B001 / 027055)

BP-4210-20
Gasket

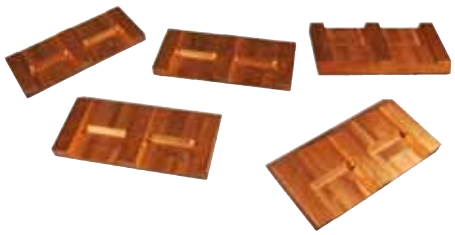

(For individual vanes, order BP-4210-07)

BP-4210-07-5
Vanes (5-pack) - Series 20–26

(OEM 067018)

BP-4211-07
Vane - 60 Series

(OEM 051491)

BP-4210-56
Rotor for 20 Series

(OEM 051482)

BP-4211-04
Rotor - 60 Series

(OEM 051475)

BP-4210-22
Rotor for 70 Series, 1800 & 390

All names, numbers, symbols and descriptions are used for reference purposes only. It is not implied that any part listed is the product of these manufacturers.

Entire contents copyright © 2022 SVI International, Inc.

Quick Reference for Gasboy / Tokheim

(OEM 066655) For 70, 1800, 390, 600 Series

BP-4210-28
Check Valve Assy.

BP-4210-30KP (OEM S00758)
(Includes Dial Glass, not pictured)

BP-4210-30LS
(OEM S00766)
with Long Shaft
Also Available

Without dial glass, order: BP-4210-30
(as shown) (OEM 048461)

BP-4210-30LSRC
(OEM S00765) 1820-RC Pulsar

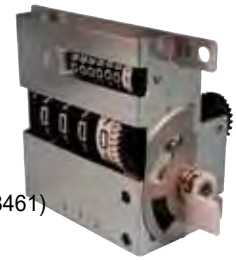

BP-4210-30KP
Meter Register with Dial Glass

For 60 Series

(OEM S00063)

BP-4211-36
Brush/Switch Replacement Kit

(OEM 054024)

BP-4210-23
Seal Kit for 70 Series & 1820

(OEM 032694)

BP-4217-05
Repair Kit for 1720A, 1520 & 787

(OEM 037744-x)

BP-4218-07A
Switch & Protector 4 Terminal

(OEM 032083) For 20 Series

BP-4210-60
Check Valve Retrofit Kits

(OEM 068994)

BP-4212-21
Left Wheel for 1860 Register

(OEM 068993)

BP-4212-20
Center Wheel for 1860 Register

(OEM 012236)

BP-4212-04
Meter Bezel - 4860

(OEM 012250)

BP-4212-40
Meter Bezel - Round (70 Series)

(OEM 062335)

BP-4210-80
Bypass Stem Assembly 70/1800

All names, numbers, symbols and descriptions are used for reference purposes only. It is not implied that any part listed is the product of these manufacturers.

Entire contents copyright © 2022 SVI International, Inc.

Quick Reference for Gasboy / Tokheim

(OEM 029590)

BP-4210-68
Nozzle Hanger 1820

(OEM 035394)

BP-4212-34
Round Dial Mask - Gallons

(OEM S64528)

BP-4212-73
Toggle Switch for Motor 70 Series

(OEM 067015)

3 vanes needed for each

BP-4214-07
Vane (1) - Carbon

(OEM 032889)

BP-4212-02
Repair Kit for 1860 Register

(OEM 032887)

BP-4217-10
Repair Kit for 1700 Series

(OEM 000325PG8)

BP-4218-30R
Nozzle Boot - 70 Series (Red)

(OEM 066534)

BP-4210-58
Vacuum Breaker Assembly

(OEM 066570)

BP-4211-23
Vacuum Breaker Assembly

(Available in Red, White or Beige)
(OEM F37332)

1/3 HP Motor 60Hz. 48 Frame

BP-4218-20
Motor for 70 Series

(OEM F37697)

1/3 HP Motor 60Hz. 48 Frame

BP-4218-28
Motor for 1800 Series

(OEM F37683 / F37684)

BP-4218-25 Motor for Models 25 & 250
BP-4218-26 Motor for Models 26, 27, 28

BP-4218-25 and BP-4218-26
60 Hz. Motors for 20 Series

All names, numbers, symbols and descriptions are used for reference purposes only. It is not implied that any part listed is the product of these manufacturers.

Entire contents copyright © 2022 SVI International, Inc.

Quick Reference for Gasboy / Tokheim

(OEM 035319)

BP-4210-67
Check Valve Assembly

(OEM 066686)

BP-4211-08
Check Valve - 60 Series

(OEM 054026)

BP-4210-04
Seal Kit - 600 Series

(OEM 011816)

BP-4212-17
Reset Bearing

(OEM 017269)

BP-4212-18
Reset Button (1)

(OEM 033026)

BP-4212-03
Repair Kit for 4860 Register

(OEM 054522)

BP-4212-11
Drive Shaft and Gear

(OEM 054955)

BP-4212-31
Register Drive Shaft and Gear

(OEM 054512)

BP-4210-54
Drive Shaft Assembly

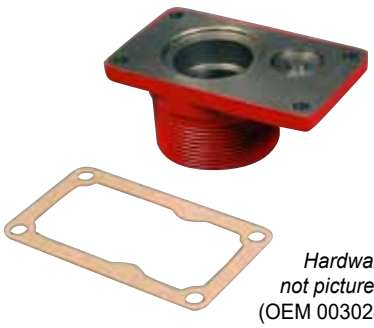

Hardware not pictured.
(OEM 003028)

BP-4211-56
Pump Adapter Kit (60/61 Pump)

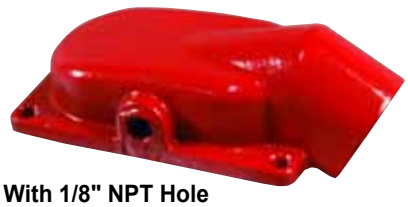

With 1/8" NPT Hole

**See BP-4211-23 for Vacuum Breaker*
***For 1/8" NPT Plug order F-PL-0125*

For 60 Series
(OEM 003349, 003522)

BP-4211-21
Top Cover with Hole (60 Series)

(OEM 034121)

BP-4212-74
Motor Switch Lever

All names, numbers, symbols and descriptions are used for reference purposes only. It is not implied that any part listed is the product of these manufacturers.

Entire contents copyright © 2022 SVI International, Inc.

Quick Reference for Gasboy / Tokheim

(OEM 000785)

BP-4214-13
Nozzle for 1220 Series Diesel

(OEM 015844)

BP-4211-34
Brush

Call SVI Today for Repair Parts for Gasboy or Tokheim.

You might also be interested in...

SVI's Repair Parts for:
- Petroleum Equipment
- Lubrication Equipment

(OEM 003835)

BP-4218-02
Install-A-Socket

(OEM 065305)

BP-4218-01
Totalizer

(OEM 003065)

BP-4210-101
Pump Base

(OEM 032934)

BP-4210-03
Repair Kit Series 620

(OEM 032886)

BP-4217-03
Repair Kit for 300 Series

(OEM 032891)

BP-4218-91
Repair Kit for 124 & 424

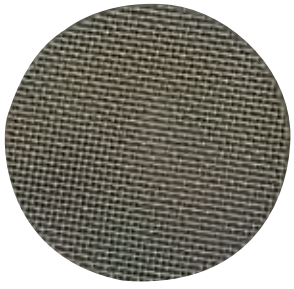

(OEM 051586)

BP-4211-39
Strainer, 60 Series

(OEM 048995)

BP-4214-03
O-Ring Seal for 1200 Series

(OEM 067030-5)

For Individual Vane: BP-4210-08 (OEM 067030)

BP-4210-08-5
Vanes (5-Pack)

All names, numbers, symbols and descriptions are used for reference purposes only. It is not implied that any part listed is the product of these manufacturers.

Entire contents copyright © 2022 SVI International, Inc.

20 / 420 Series Models

Models 25–28 (Tokheim 425-428) and Model 250 Pump & Motor

There are two typical culprits for why the pump will lose its prime—Most likely the check valve is not functioning properly or the vanes have a very excessive amount of wear. So, you would replace with a 5-pack of vanes or a new check valve assembly.

Replacing a Model 25 motor?
Note: When replacing an AO Smith motor with a Franklin on a Model 25, items 5, 6 and 7 on the following page must be replaced. It may also be necessary to drill a clearance hole in the side frame of the Model 25 to prevent the on/off switch threads from interfering with the side of the unit.

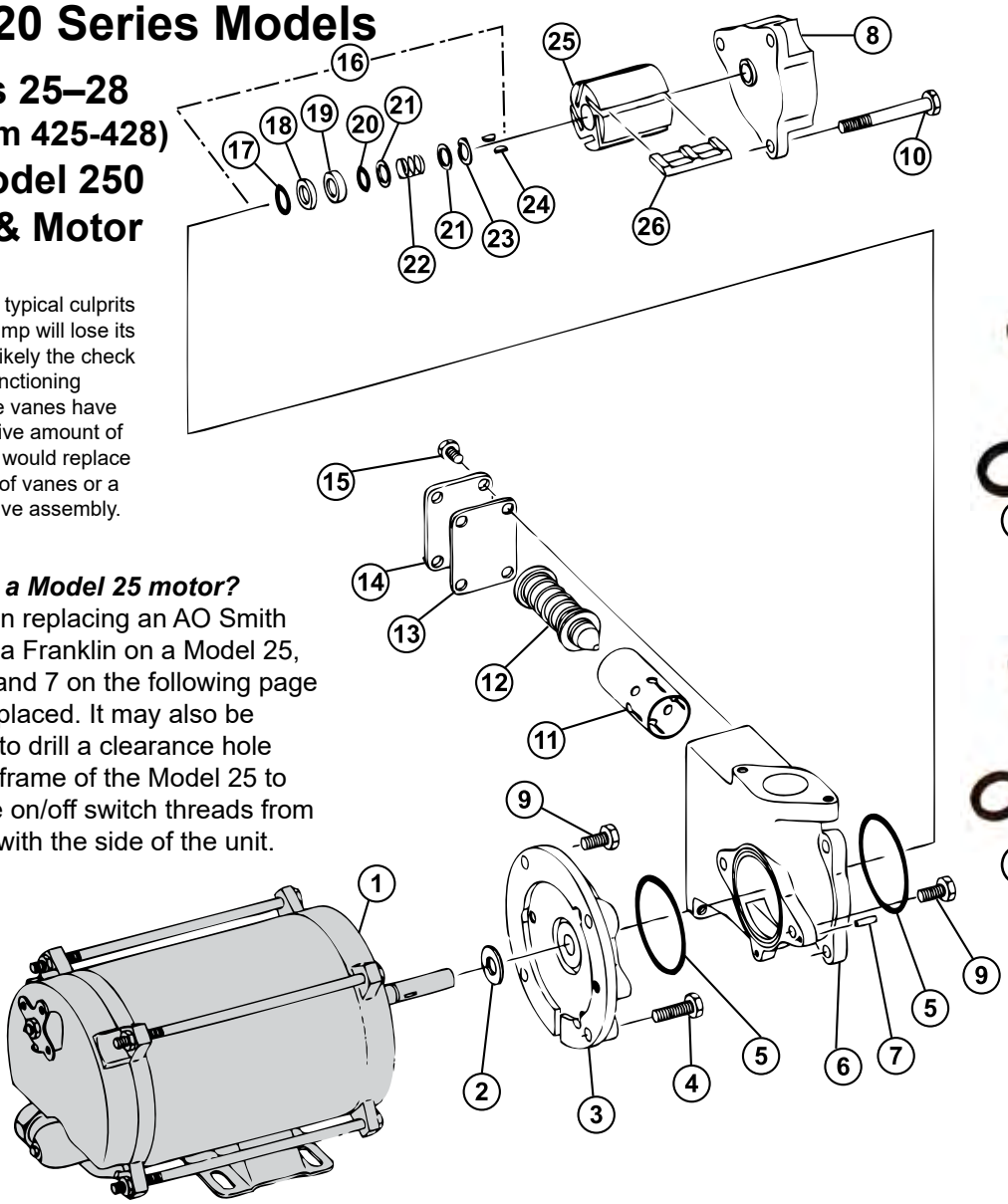

BP-4210-56
Rotor

16 BP-4210-29
(old style)

16 BP-4210-29N
(new style)

Item	SVI Part #	OEM #	Description
1	**BP-4218-25**	F37683	Motor, Model 25 & 250, 60 Hz.
	No longer available	F37685	Motor, Model 25 & 250, 50 Hz.
	BP-4218-26	F37684	Motor, Model 26, 27, 28, 60 Hz.
	No longer available	F37686	Motor, Model 26, 27, 28, 50 Hz.
2	BP-4210-86	049525	Slinger Ring, Buna N side toward pumping unit
3	BP-4210-75	003722	Inner Pump Head
4	call for details	052045	Cap Screw, 3/8-16 x 1-1/4
5**	BP-4210-53	049180	O-Ring 3" ID
6	call for details	003208	Pump Block
7	BP-4210-77	054535	Locating Pin
8	call for details	022168	Pump Cover
9	call for details	051985	Cap Screw, 3/8-16 x 3/4
10	call for details	052135	Cap Screw 3/8-16 x 3
11	BP-4215-09	065726	Bypass Tube
12	BP-4215-08	066991	Bypass Valve Assembly

Item	SVI Part #	OEM #	Description
13**	BP-4210-43	026811	Bypass Valve Gasket
14	call for details	023037	Bypass Cover
15	BP-4210-113	051880	Cap Screw, 5/16-18 x 1/2
16**	**BP-4210-29**	054030	Seal Assembly (old style)
	BP-4210-29N	054030	Seal Assembly (new style)
17	BP-4210-36	048956	O-Ring
18	BP-4210-35	048820	Floating Seal Ring
19	BP-4210-34	049510	Rotating Seal Ring
20**	BP-4210-33	048941	O-Ring .612 ID
21	BP-4210-32	067210	Washer
22	BP-4210-31	057956	Spring
23	call for details	049436	E-Ring
24	BP-4210-73	031375	Woodruff Key
25	BP-4210-56	051491	Rotor
26**	BP-4210-07	067061	Vane
	BP-4210-07-5		Vanes (5-pack)

** Part is included in Repair Kit **BP-4210-02** (OEM # 032892)

All names, numbers, symbols and descriptions are used for reference purposes only. It is not implied that any part listed is the product of these manufacturers.

Entire contents copyright © 2022 SVI International, Inc.

20 / 420 Series Models

Model 25 / 425 Assembly

Register With Dial Glass:
BP-4210-30KP
BP-4210-30LS
(Dial glass not pictured)

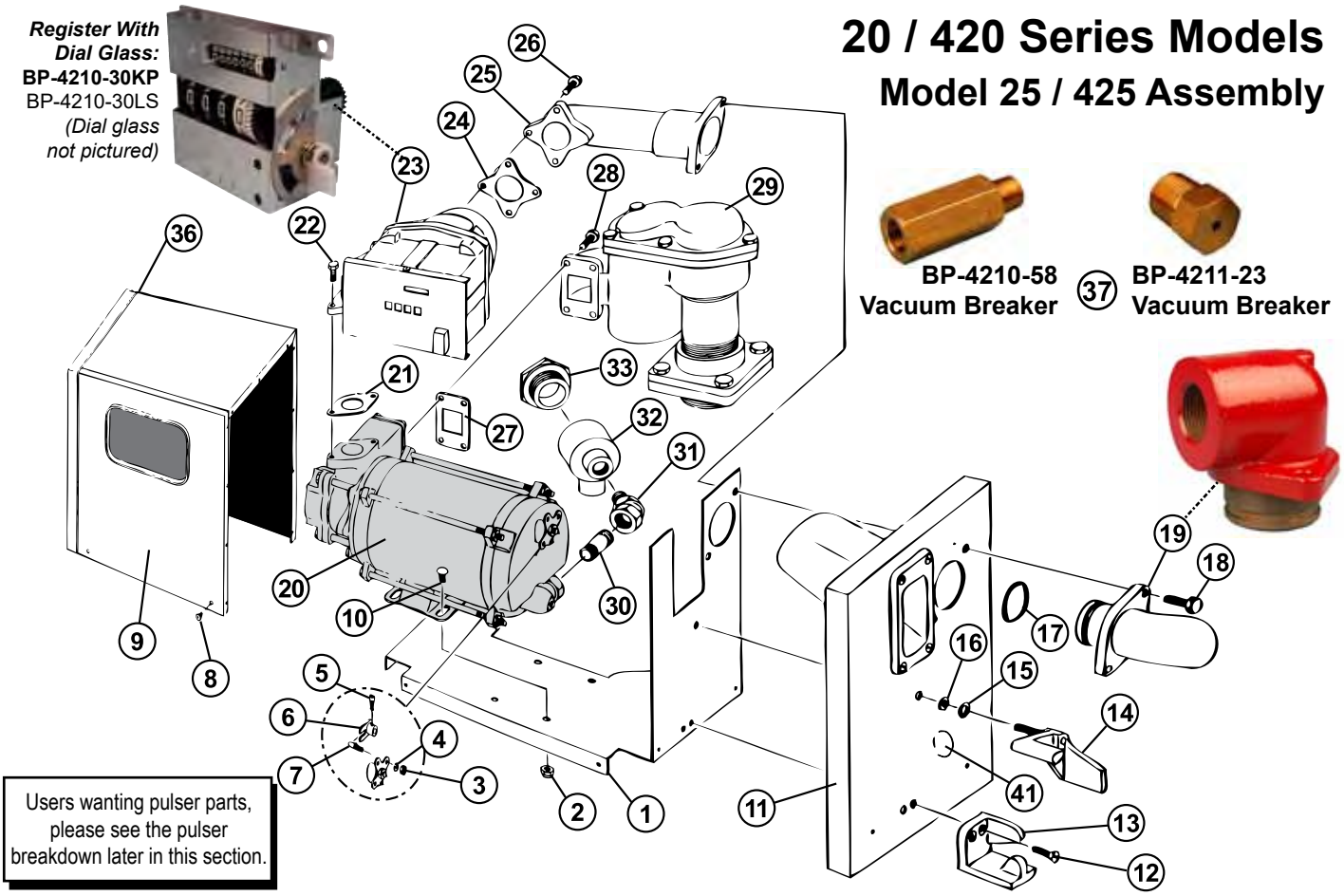

BP-4210-58
Vacuum Breaker

37

BP-4211-23
Vacuum Breaker

Users wanting pulser parts, please see the pulser breakdown later in this section.

Item	SVI Part #	OEM #	Description
1	call for details	026519	Frame Assembly
2	BP-4217-11	038920	5/16-18 Hex Lock Nut
3	F-HN-0250-20	038860	Hex Nut, 1/4"
4	call for details	068891	Lockwasher, 1/4"
5	call for details	053516	Soc. Head Set Screw 10-32 x 1/4 Cup
6	call for details	017566	Cam Assembly
7	BP-4215-20	042282	Pin
8	call for details	053652	Phillips Head Screw, #8-32 x 1/2
9	call for details	022102	Front Cover Assembly, CRS
	call for details	041276	Front Cover Assembly, SS
10	call for details	013030	Carriage Bolt
11	call for details	041382	Right Side Panel Assembly, CRS
	call for details	041831	Right Side Panel Assembly, SS
12	call for details	052315	Mach. Screw, 1/4-20x5/8" (for 003673 Hanger)
	BP-4211-42	051805	Screw (for 015139 Hanger, not shown)
13	BP-4210-87	003673	Nozzle Hanger (Auto Nozzle)
	call for details	015139	Nozzle Hanger (Manual Nozzle, not shown)
14	call for details	051072	Switch Arm Assembly
15	call for details	068281	Spring Washer
16	call for details	068020	Washer, 5/16"
17**	BP-4210-51	049062	O-Ring, 1-11/16" ID
18	BP-4210-112	051895	Cap Screw 5/16-18 x 3/4"
19	BP-4210-38	003647	Discharge Flange
	call for details	003611	Discharge Flange w/ Vacuum Breaker Hole
20	**BP-4218-25**	F37683	Motor, Model 25 & 250, 60 Hz.
	No longer available	F37685	Motor, Model 25 & 250, 50 Hz.

Item	SVI Part #	OEM #	Description
21**	BP-4210-42	026810	Gasket
22	call for details	051900	Cap Screw, 5/16-18 x 7/8
23	call for details		Meter, Register - Complete
	BP-4210-30KP	S00758	Register Assembly (w/ Dial Glass)
	BP-4210-30LS	S00766	Reg. Assy., Ext. Shaft/Pul (w/ Dial Glass)
	BP-4210-30	048461	Register Assembly (no glass) (pictured)
24**	BP-4210-41	026809	Gasket
25	BP-4215-15	003541	Discharge Casting
26	call for details	051900	Cap Screw, 5/16-18 x 7/8
27**	BP-4210-44	026812	Gasket
28	call for details	051900	Cap Screw, 5/16-18 x 7/8
29	call for details	063357	Strainer Block Assembly, Gasoline
	call for details	063358	Strainer Block Assembly, Diesel
30	call for details	021532	Conduit, 1/2 x 1-3/4
31	call for details	025015	Conduit Ell, 1/2 x 45
32	call for details	003345	Junction Box
33	call for details	003515	Junction Box Cover
34	call for details	030430	Hose, 1" x 12' (not shown)
35	call for details	038509	Nozzle, 402-Manual (not shown)
	call for details	038531	Alt. Nozzle, 7H-Automatic (not shown)
36	call for details	022253	Cover Assembly (Top, Back & Left Side), CRS
	call for details	041291	Cover Assembly (Top, Back & Left Side), SS
37	BP-4210-58	066534	Vacuum Breaker Assy., threaded
	BP-4211-23	066570	Vacuum Breaker Assembly
38	call for details	063209	Eccentric Stop (not shown)
39	call for details	052314	Screw (not shown)
40	call for details	012267	Bezel
41	call for details	047213	Plug

** Part is included in Repair Kit **BP-4210-02** (OEM # 032892)

All names, numbers, symbols and descriptions are used for reference purposes only. It is not implied that any part listed is the product of these manufacturers.

Entire contents copyright © 2022 SVI International, Inc.

20 / 420 Series Models

Model 26 / 426 Assembly

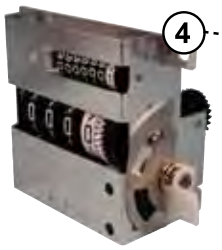

BP-4210-30KP *(dial glass included; not pictured)*
BP-4210-30LS *(also available)*
BP-4210-30 (pictured)

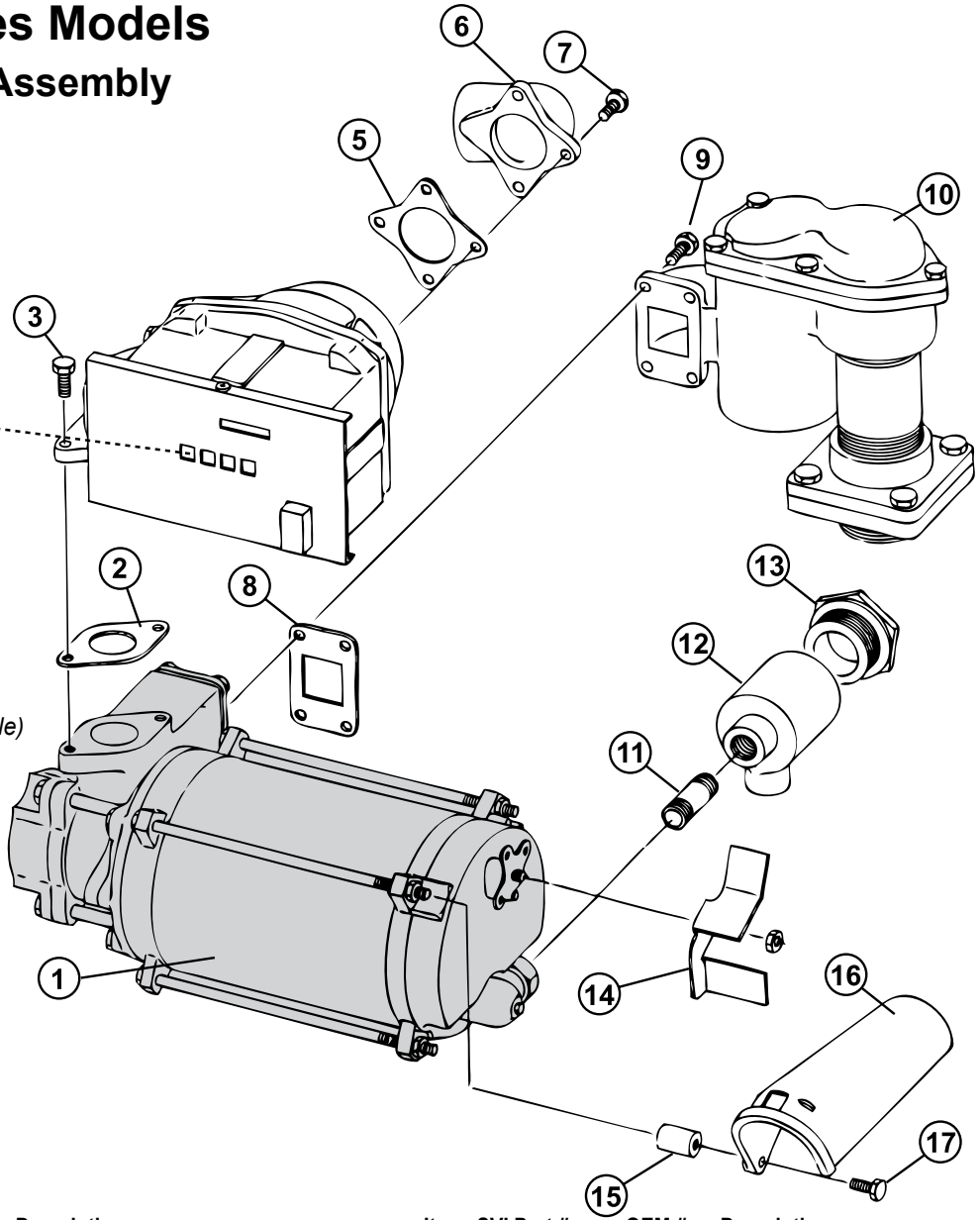

20 BP-4210-58
Vacuum Breaker

Item	SVI Part #	OEM #	Description
1	BP-4218-26	F37684	Motor, Model 26, 27, 28, 60 Hz.
	No longer available	F37686	Motor, Model 26, 27, 28, 50 Hz.
2	BP-4210-42	026810	Gasket
3	BP-4210-112	051895	Cap Screw, 5/16-18 x 3/4
4	call for details		Meter, Register Assy.
	BP-4210-30KP	S00758	Register Assembly (w/ Dial Glass)
	BP-4210-30LS	S00766	Reg. Assy., Ext. Shaft/Pul (w/ Dial Glass)
	BP-4210-30	048461	Register Assembly (no glass) (pictured)
5	BP-4210-41	026809	Gasket
6	BP-4215-42	003072	Discharge Casting
	call for details	003088	Discharge Casting w/Vacuum Breaker Hole
7	call for details	051900	Cap Screw, 5/16-18 x 7/8
8	BP-4210-44	026812	Gasket
9	BP-4210-112	051895	Cap Screw, 5/16-18 x 3/4"
10	call for details	063357	Strainer Block Assembly, Gasoline
	call for details	063358	Strainer Block Assembly, Diesel

Item	SVI Part #	OEM #	Description
11	call for details	021337	Conduit, 1/2 x 2"
12	call for details	003345	Junction Box
13	call for details	003515	Junction Box Cover
14	BP-4215-35	034497	Switch Plate
15	call for details	056967	Spacer
16	BP-4210-78	003331	Nozzle Boot
17	BP-4210-112	051895	Cap Screw, 5/16-18 x 3/4
18	call for details	030430	Hose, 1" x 12'
19	call for details	038413	Nozzle with Hook (311-Manual)
	call for details	*003788	Hook Only
	call for details	*053151	Set Screw
	call for details	038412	Alt. Nozzle with Hook (7H-Automatic)
	call for details	*003789	Hook Only
	BP-4215-40	*053155	Set Screw
20	BP-4210-58	066534	Vacuum Breaker Assembly, Threaded

All names, numbers, symbols and descriptions are used for reference purposes only. It is not implied that any part listed is the product of these manufacturers.

Entire contents copyright © 2022 SVI International, Inc.

20 / 420 Series Models

Model 27 / 427 & 28 / 428 Assembly

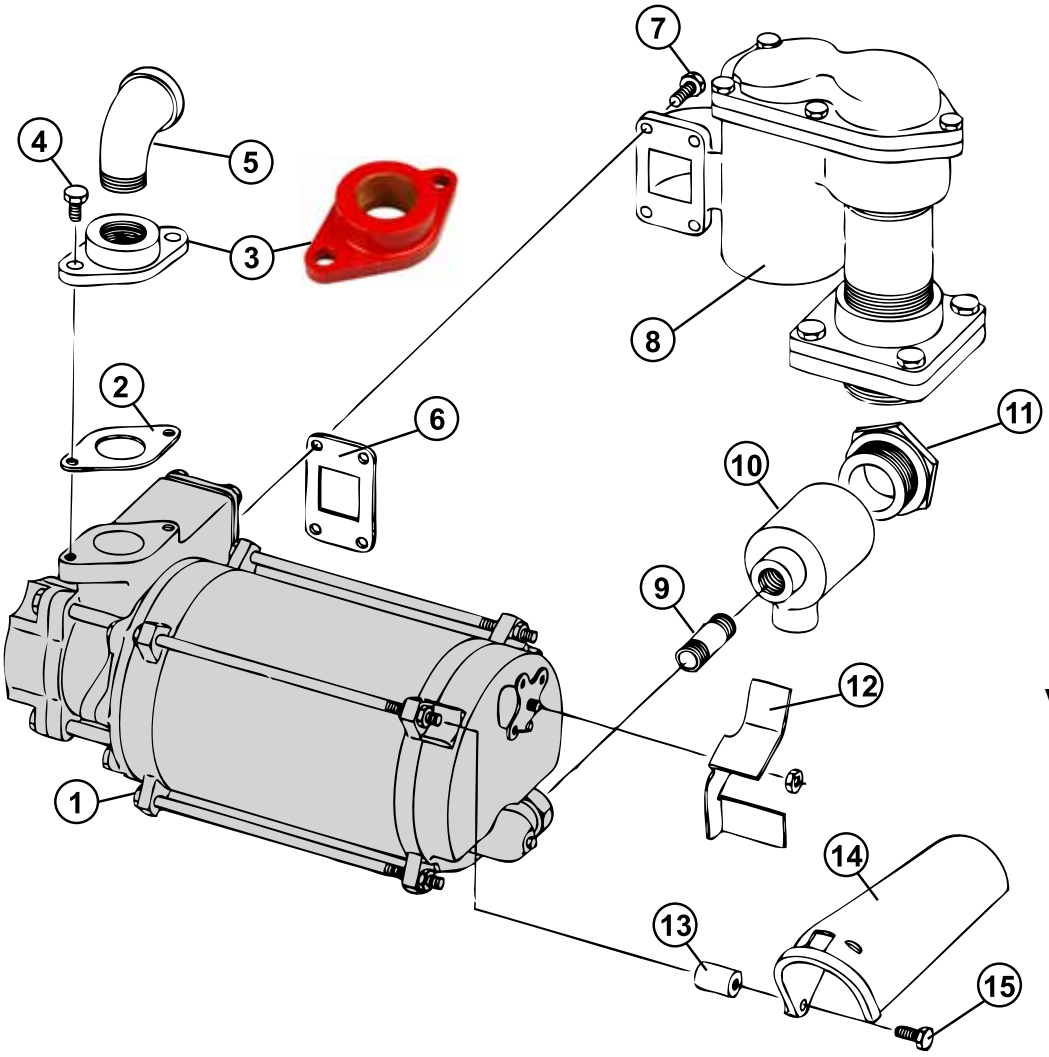

16 BP-4210-58
Vacuum Breaker

Item	SVI Part #	OEM #	Description
1	BP-4218-26	F37684	Motor, Model 26, 27, 28, 60 Hz.
	No longer available	F37686	Motor, Model 26, 27, 28, 50 Hz.
2	BP-4210-42	026810	Gasket
	call for details	030430	Hose, 1" x 12'
	call for details	038413	Nozzle with Hook (311-Manual)
	call for details	038412	Alt. Nozzle with Hook (7H-Automatic)
3	BP-4210-39	003640	Flange
4	BP-4210-112	051895	Cap Screw, 5/16-18 x 3/4"
5	call for details	024941	Street Ell, 1" x 90
	BP-4215-50	024933	Discharge Casting w/Vacuum Breaker Hole
6	BP-4210-44	026812	Gasket

Item	SVI Part #	OEM #	Description
7	call for details	051900	Cap Screw, 5/16-18 x 7/8"
8	call for details	063357	Strainer Block Assembly, Gasoline
	call for details	063358	Strainer Block Assembly, Diesel
9	call for details	021337	Conduit, 1/2 x 2"
10	call for details	003345	Junction Box
11	call for details	003515	Junction Box Cover
12	BP-4215-35	034497	Switch Plate
13	call for details	056967	Spacer
14	BP-4210-78	003331	Nozzle Boot
15	BP-4210-112	051895	Cap Screw, 5/16-18 x 3/4"
16	BP-4210-58	066534	Vacuum Breaker Assy., Threaded (see picture)

All names, numbers, symbols and descriptions are used for reference purposes only. It is not implied that any part listed is the product of these manufacturers.

Entire contents copyright © 2022 SVI International, Inc.

20 / 420 Series Models

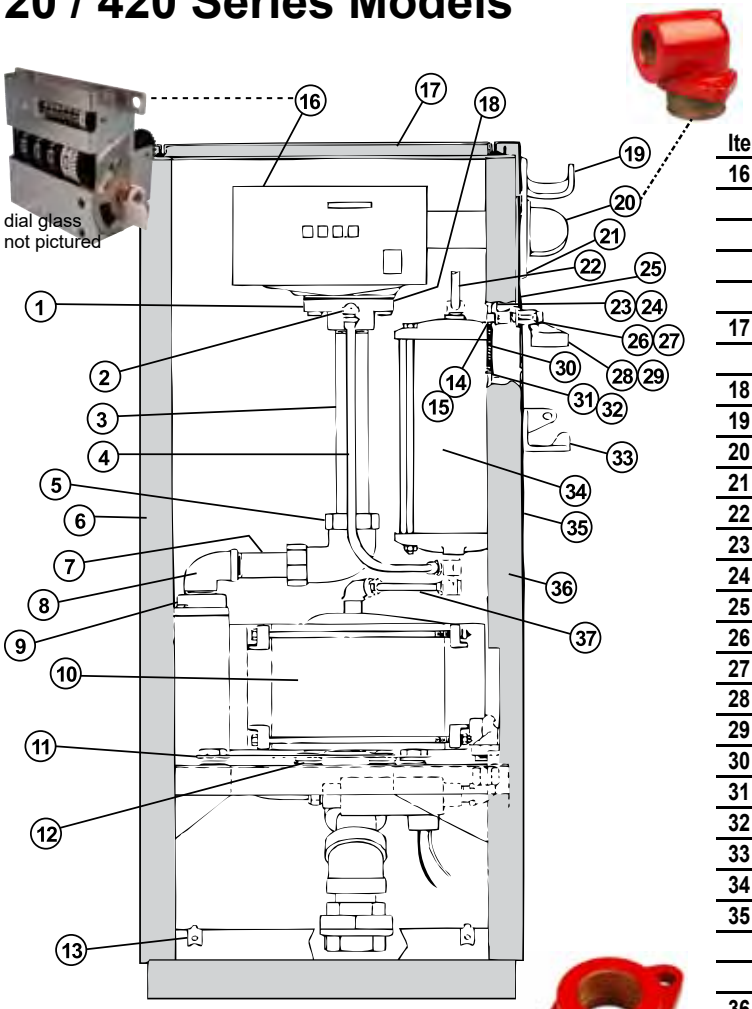

Mechanical Keytrol users, please see the Mechanical Keytrol Breakdown later in this section.

Item	SVI Part #	OEM #	Description
16	call for details	037200	Meter & Register US Diesel
	call for details	037228	Meter Register-250AR Liter Cogetil w/External
	BP-4210-30KP	S00758	Register Assembly (w/ Dial Glass)
	BP-4210-30LS	S00766	Reg. Assy., Ext. Shaft/Pul (w/ Dial Glass)
	BP-4210-30	048461	Register Assembly (no glass) (as pictured)
17	call for details	022109	Top Cover
	call for details	022986	Top Cover Assembly (SS)
18	BP-4210-45	026814	Gasket
19	call for details	003740	Hose Hook
20	BP-4210-38	003647	Flange - Hose
21	call for details	003818	Nozzle Boot
22	call for details	065717	Vent Tube Assembly
23	call for details	017571	Cam Assembly
24	call for details	053516	Set Screw 10-32 x 1/4
25	call for details	041715	Scuff Panel
26	call for details	063209	Eccentric Stop
27	call for details	052314	Screw 1/4-20 x 1 Flat HD
28	call for details	051072	Switch Arm Assembly
29	call for details	068281	Spring Washer
30	call for details	057160	Spring
31	call for details	021145	Collar
32	call for details	053140	Set Screw 10-32 x 3/16
33	BP-4210-87	003673	Nozzle Hook
34	call for details	026417	Float Chamber Assembly
35	call for details	041716	RH Panel Assembly
	call for details	041746	Right Panel Assembly (Ketrol Pulser)
	call for details	041787	RH Panel Assembly (SS)
36	call for details	026555	Frame
	call for details	026558	Frame 250ARK
37	call for details	063666	Tube Assembly - Return

Model 250, 4250, Front View

Item	SVI Part #	OEM #	Description
1	call for details	003019	Flange, 25AR
	BP-4219-21	003561	Inlet Manifold
2	call for details	026044	Elbow Fitting 3/8" 250AR
3	call for details	045296	Pipe 1" x 12" TOE
4	call for details	065716	Tube Assembly - Supply
5	call for details	024910	Dresser Elbow
	BP-4215-16	054207	Dresser Seal
6	call for details	041713	Left Panel Assembly
	call for details	040208	Left Panel Assembly (SS)
	call for details	040239	Left Panel Assembly (Pulser)
	call for details	040238	LH Panel Assembly (SS, Pulser)
	call for details	041731	Left panel Assembly (Keytrol)
7	call for details	045235	Pipe 1" x 4" TOE
8	call for details	024941	ST Elbow 1" x 90° *Note: Non-Keytrol/ Pulser Units use P/N 044700 1"x16" pipe between meter and pump unit.*
9	**BP-4210-39**	003640	Flange
10	BP-4218-25	F37683	Motor, Model 25 & 250, 60 Hz.
	No longer available	F37685	Motor, Model 25 & 250, 50 Hz.
11	call for details	047115	Motor Platform
12	call for details		Motor Mount Assembly
13	call for details	039610	Speed Nut
14	call for details	063700	Stud-Swivel
15	call for details	049406	Snap Ring

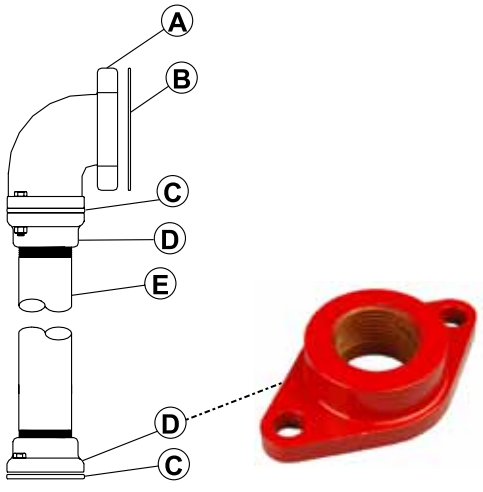

Model 250
Model 4250

Alternate Piping: Units without Float Chamber

Item	SVI Part #	OEM #	Description
A	BP-4219-21	003561	Manifold Inlet
B	BP-4210-45	026814	Gasket
C	BP-4210-42	026810	Gasket, Inlet Manifold
D	**BP-4210-39**	003640	Flange
E	call for details	044700	Pipe, TBE 1 x 16

All names, numbers, symbols and descriptions are used for reference purposes only. It is not implied that any part listed is the product of these manufacturers.

Entire contents copyright © 2022 SVI International, Inc.

20 / 420 Series Models

Model 250 / 4250, Side View

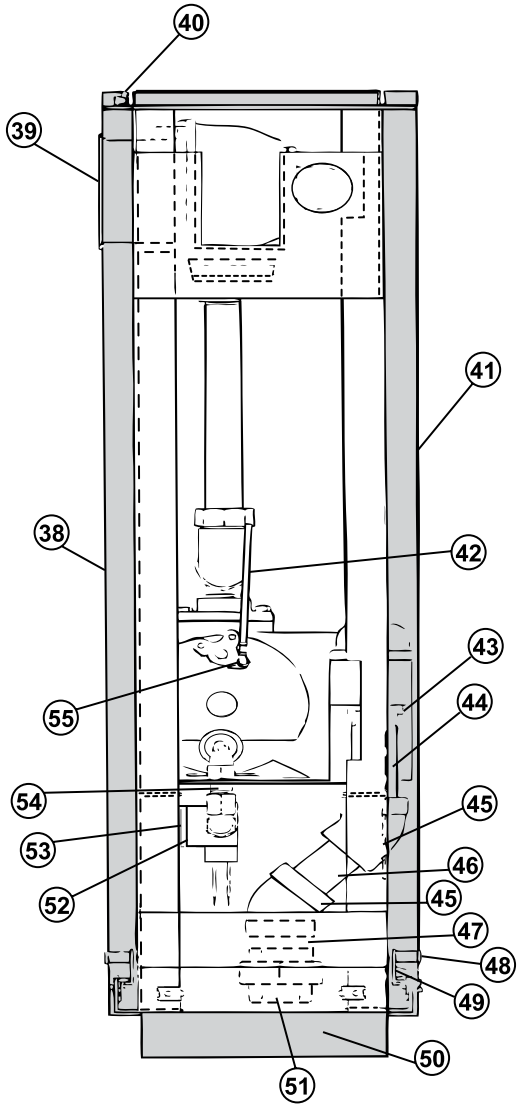

Item	SVI Part #	OEM #	Description
38	call for details	041711	Front Panel Assembly
	call for details	041726	Front Panel Assembly (Keytrol, Pulser)
	call for details	040209	Front Panel (SS)
39	call for details	012267	Bezel
40	call for details	020952	Spring Clip
41	call for details	041712	Rear Panel Assembly
	call for details	041727	Rear Panel Assembly (Keytrol, Pulser)
	call for details	041738	Rear Panel Assembly (SS)
42	call for details	050624	Switch Rod Assembly
43	call for details	017271	Bushing
44	call for details	045430	Pipe 1-1/4" x 4 TBE
45	call for details	024947	Elbow 1-1/4" x 45°
46	call for details	044857	Pipe 1-1/4" x 3" TBE
47	call for details	038036	Pipe 1-1/4 x 1"
48	call for details	035010	Lock, w/ Dust Cover
49	call for details	017510	Lock Cam
50	call for details	011607	Base
51	call for details	066387	Union 1-1/4"
52	call for details	003238	Junction Box
53	call for details	003463	Junction Box Cover
54	call for details	021346	Conduit
55	BP-4210-90	021040	Clip

All names, numbers, symbols and descriptions are used for reference purposes only. It is not implied that any part listed is the product of these manufacturers.

Entire contents copyright © 2022 SVI International, Inc.

Models 25–28 (Tokheim 425-428) Strainer Block Assembly

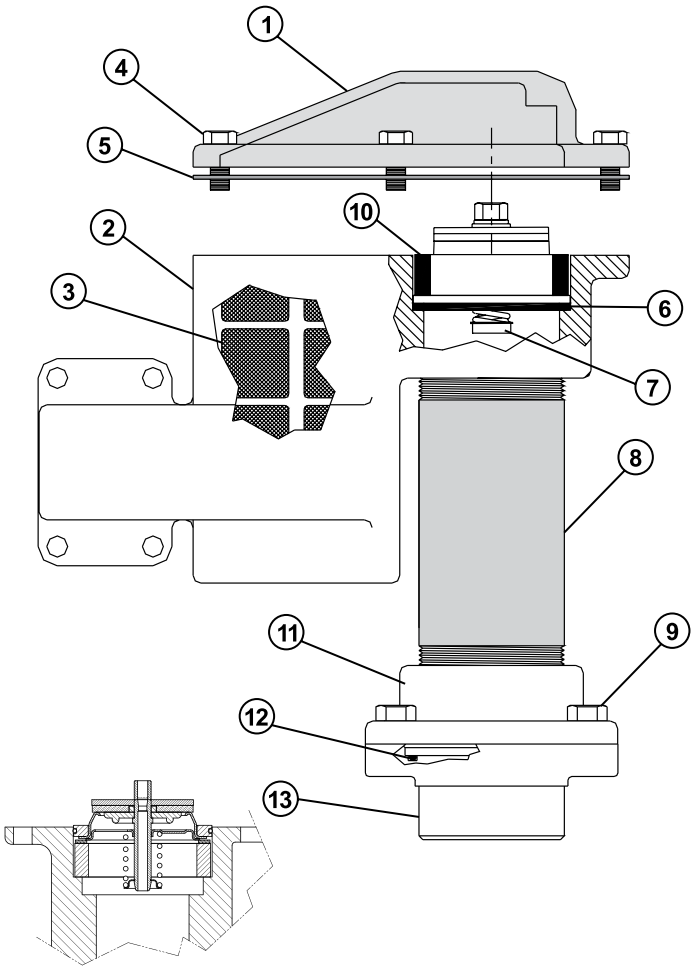

Item	SVI Part #	OEM #	Description
1	BP-4210-61	003489	Strainer Cover, 25, 26, 27, 28 & 250
	call for details	003491	Strainer Cover, 250AR only
2	call for details	003207	Strainer Block
3	BP-4210-13	063282	Strainer (Gasoline), 100 Mesh
	BP-4210-14	063283	Strainer (Diesel), 40 Mesh
4	BP-4210-112	051895	Cap Screw, 5/16-18 x 3/4
5	BP-4210-62	027360	Gasket
6	BP-4214-88	049136	Square Cut Ring
7	call for details	020620	Check Valve Assembly
8	call for details	044942	Pipe TBE, 2 x 6
9	call for details	052015	Cap Screw, 3/8-16 x 1"
10	call for details	065525	Spacer
11	BP-4210-116	003648	Inlet Flange
12	BP-4210-55	049167	O-Ring, 2-1/2 x 2-11/16
13	BP-4210-117	003078	Base

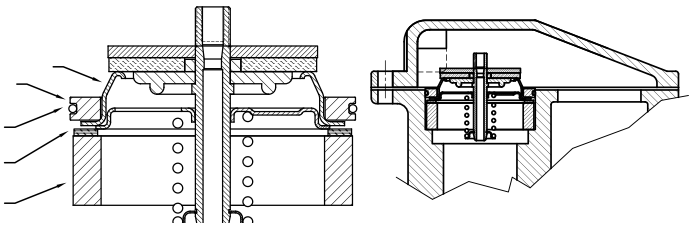

NOTE: A design change was made on 6/2/2003 replacing the metal check valve with a plastic check valve. If your pump serial number is 8139213 or older (US Models) or 1028283C or older (Canada models), you must order retrofit kit OEM# 032083 (SVI# **BP-4210-60**). The picture (left) shows kit OEM# 032631 (BP-4210-69)

Check Valve Kit for Models 25–28 and 250
OEM# 032083 (SVI# **BP-4210-60**)
See Below

Check Valve Retrofit Kits

Models 25/425, 26/426, 27/427, 28/428 & 250/4250

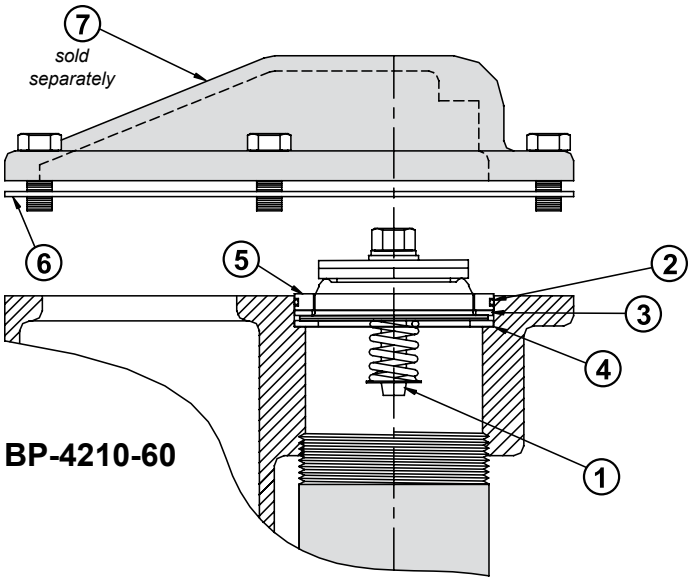

BP-4210-60

BP-4210-60

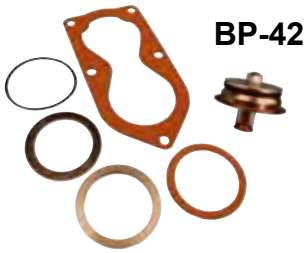

Item	SVI Part #	OEM #	Description
	BP-4210-60	032083	**Check Valve Retrofit Kit** (Models 25/425, 26/426, 27/427, 28/428 & 250/4250)
	BP-4215-51	032084	**Check Valve Retrofit Kit** (Models 250AR/4250AR)
1	BP-4210-67	035319	Check Valve Assembly
2	BP-4210-64	049019	O-Ring
3	BP-4210-65	027301	Gasket
4	BP-4210-66	047202	Check Valve Support Plate
5	BP-4210-63	047201	Upper Check
6	BP-4210-62	027360	Gasket
7*	**BP-4210-61**	003489	Strainer Cover, 25, 26, 27, 28 & 250
	call for details	003491	Strainer Cover, 250AR only

**Item #7 - Strainer is sold separately and is not part of Kit BP-4210-60.*

All names, numbers, symbols and descriptions are used for reference purposes only. It is not implied that any part listed is the product of these manufacturers.

Entire contents copyright © 2022 SVI International, Inc.

Models 25 / 425 & 26 / 426 Filter Assembly

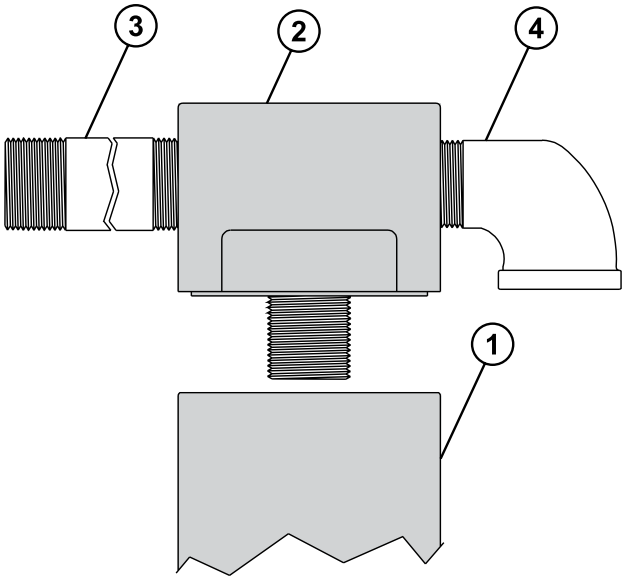

Item	SVI Part #	OEM #	Description
1	call for details	026018	Filter, Gas
	call for details	026019	Filter, Diesel
2	call for details	003087	Filter Adapter
3	call for details	044579	Pipe TBE, 1 x 5-3/8, Model 25 & 250
	call for details	044614	Pipe TBE, 1 x 7-1/2, Model 26
4	call for details	024941	Street Elbow, 1 x 90°

Model 25 / 425 Pulser Assembly

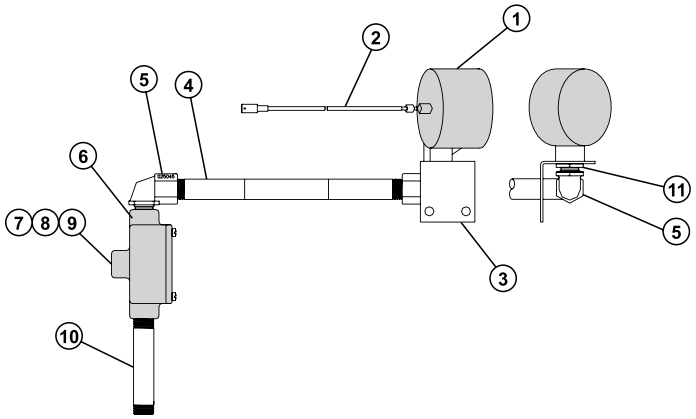

Item	SVI Part #	OEM #	Description
1	call for details	021788	Pulser, 10:1, VR
2	BP-2353-065	017335	Cable Assembly
3	call for details	015077	Bracket, Pulser
4	call for details	021329	Conduit, Offset, 2-15/16 x 9-1/2
5	call for details	025045	Elbow, Conduit, 1/2 x 90 M/F
6	call for details	Z10186	Junction Box
7	call for details	052976	Screw, 10-32 x .375, SL BH
8	call for details	067500	Washer, Brass, Cupped
9	call for details	047212	Plug, Conduit, 1/2" w/Ground Screw
10	call for details	021364	Conduit 1/2 x 3-1/2
11	call for details	039130	Nut, Conduit Lock

Model 250 / 4250 Pulser Assembly

Item	SVI Part #	OEM #	Description
1	call for details	021788	Pulser, 10:1, VR
2	call for details	014639	Bracket
3	call for details	039130	Nut, Conduit Lock, 1/2"
4	call for details	021454	Conduit, Pulser, Left Side
5	call for details	043210	Pin, Spirol
6	BP-2353-065	017335	Cable Drive Assembly
7	call for details	003515	Junction Box Cover, Mach.
8	call for details	003345	Junction Box
9	call for details	025045	Elbow, Conduit, 1/2 x 90°, M/F

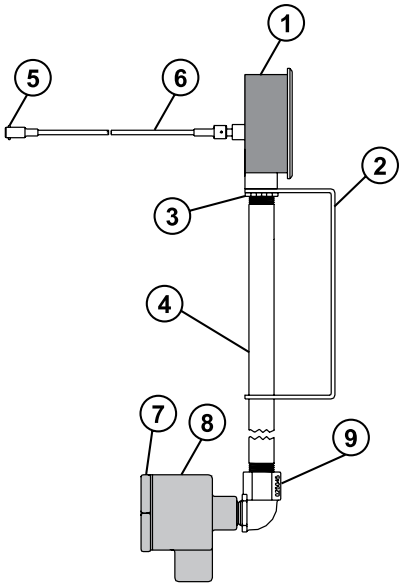

All names, numbers, symbols and descriptions are used for reference purposes only. It is not implied that any part listed is the product of these manufacturers.

Entire contents copyright © 2022 SVI International, Inc.

Model 250 / 4250
Motor Mount Assembly

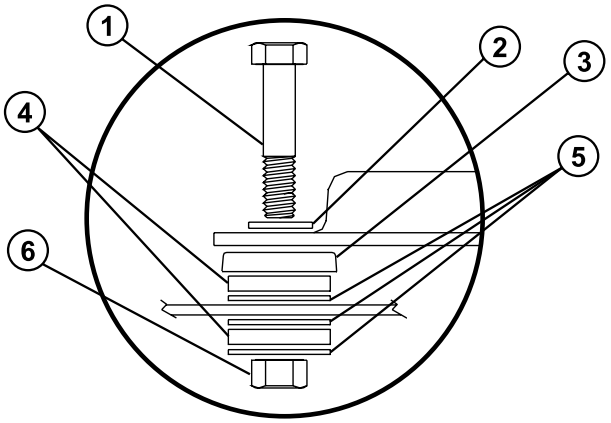

Item	SVI Part #	OEM #	Description
1	call for details	051940	5/16-18 x 1-1/2 HHC Screw
2	call for details	068080	5/16 Washer
3	call for details	067735	Cup Washer
4	call for details	037885	Rubber Mount
5	call for details	068620	Washer
6	BP-4217-11	038920	5/16-18 Hex Lock Nut

Vacuum Breaker Kits

SVI Part #	OEM #	Description
call for details	032698	Model 25
call for details	032699	Model 26
call for details	032798	Models 27 & 28

Model 250 / 4250- Mechanical Keytrol Breakdown

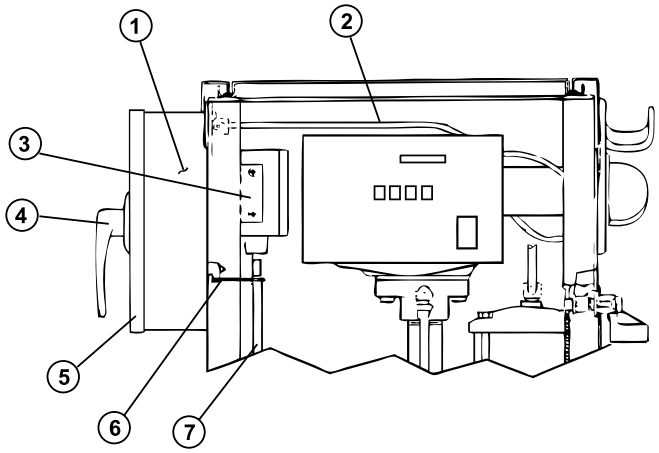

Item	SVI Part #	OEM #	Description
1	call for details	032489	Keytrol, 10K
2	call for details	055254	Keytrol Drive Cable Assembly
3	call for details	064376	Switch Assembly and Conduit
4	call for details	029415	Locking Handle Assembly
5	call for details	024407	Door Assembly
6	call for details	010009	Switch Activator Assembly
7	call for details	021412	Cable, MI 54" x 2 x 14AWG

Repair Kit for Series 25-26 (425 / 426)

SVI Part #	OEM #	Description
BP-4210-02	**032892**	**Repair Kit for Series 25-26 (old style)**
BP-4210-02N	**032892**	**Repair Kit for Series 25-26 (new style)**
BP-4210-40	014095	Bearing - Seal Stuffing Box
BP-4210-41	026809	Gasket, Discharge Flange
BP-4210-42	026810	Gasket, Inlet Manifold
BP-4210-43	026811	Gasket, Bypass Valve
BP-4210-44	026812	Gasket, Strainer Block
BP-4210-45	026814	Gasket
BP-4210-46	028736	Dial Glass
BP-4210-47	031345	Key, Spring
BP-4210-48	048865	O-Ring, 5/32 x 9/32, Buna-N
BP-4210-49	048895	O-Ring, 5/16 x 7/16, Buna-N
BP-4210-33	048941	O-Ring, .612ID x .103W
BP-4210-50	036995	Meter-Parts Stuffing Box
BP-4210-51	049062	O-Ring, 1-11/16 x 1-7/8, Buna-N
BP-4210-52	049063	O-Ring, 6 x 6-3/16, Buna
BP-4210-53	049180	O-Ring, 3 x 3-1/4 Buna-N
BP-4210-54	054512	Drive Shaft Assembly
BP-4210-07 BP-4210-07-5	067061	Vane for series 25-26 Vanes (5-pack)
BP-4210-55	049167	O-Ring, 2-1/2 x 2-11/16, Buna-N
BP-4210-60	032083	Check Valve Retrofit **Kit**, Model 25-28, 250
BP-4210-29 / 29N	054030	20 Series Seal **Kit** (old style / new style)

Seal Kit
(new style)
BP-4210-29N
will be used in
BP-4210-02N
instead of
BP-4210-29

All names, numbers, symbols and descriptions are used for reference purposes only. It is not implied that any part listed is the product of these manufacturers.

Entire contents copyright © 2022 SVI International, Inc.

Models 25–28 / 425-428
Mounting Hardware

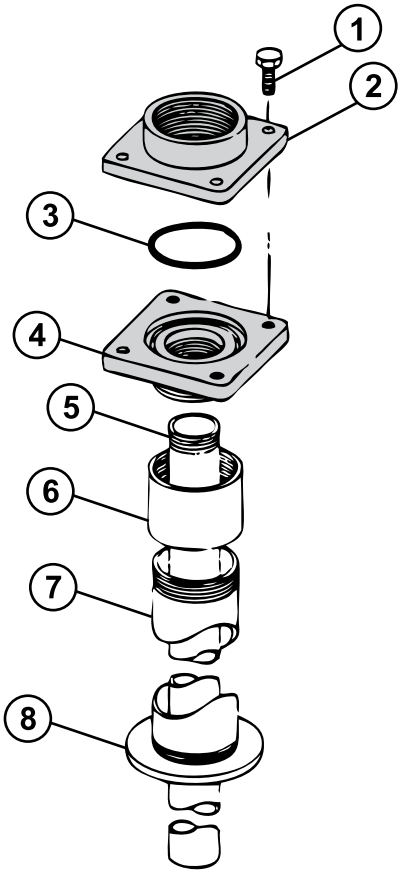

Direct Mount

Item	SVI Part #	OEM #	Description
1	call for details	052015	Cap Screw
2	BP-4210-116	003648	Top Flange
3**	BP-4210-55	049167	O-Ring 2-1/2" ID
4	BP-4210-117	003078	Bottom Flange
5	call for details	044010	Suction Pipe
6	call for details	021970	Coupling, 2"
7	call for details	045535	Pedestal Pipe, 2"
8	call for details	N/A	Tank Flange

** Part is included in Repair Kit **BP-4210-02** (OEM # 032892)

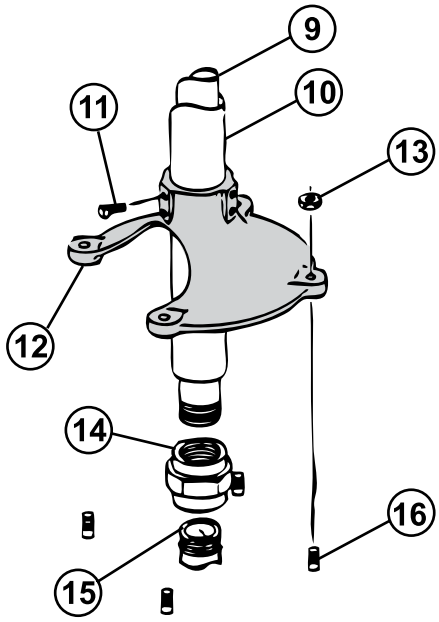

Pedestal Kit (OEM # 032039)

Item	SVI Part #	OEM #	Description
9	call for details	044010	Suction Pipe
10	call for details	045535	Pedestal Pipe, 2" Dia.
11	call for details	053320	Set Screw
12	call for details	003055	Pedestal Base
13	call for details		Nut (customer-supplied)
14	call for details	066387	Union
15	call for details		Suction Pipe (customer-supplied)
16	call for details		Anchor Bolts (customer-supplied)

All names, numbers, symbols and descriptions are used for reference purposes only. It is not implied that any part listed is the product of these manufacturers.

Entire contents copyright © 2022 SVI International, Inc.

60 / 460 Series General Assembly

There are two typical culprits for why the pump will lose its prime—Most likely the check valve is not functioning properly or the vanes have a very excessive amount of wear. So, you would replace with a 5-pack of vanes or a new check valve assembly.

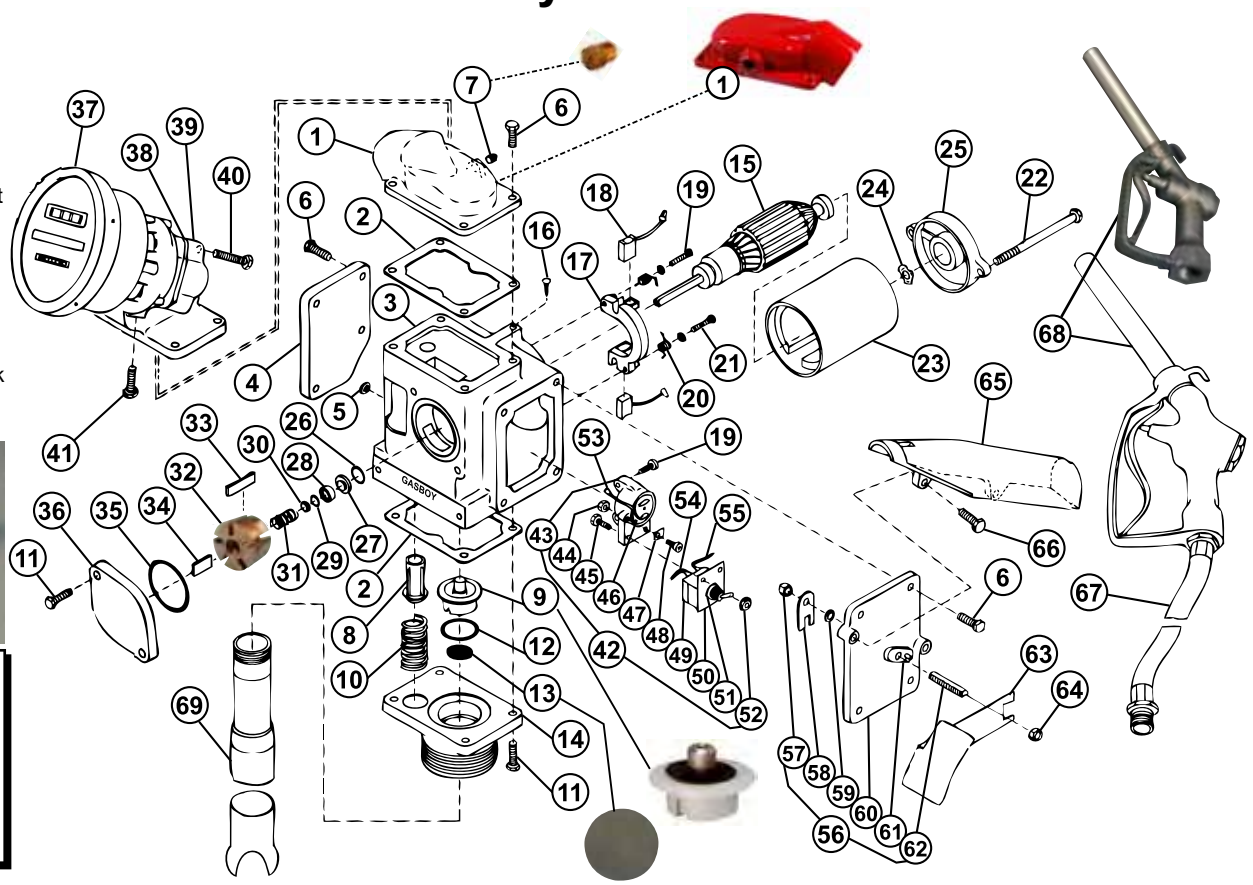

Item	SVI Part #	OEM #	Description
1	BP-4211-21	003349	Top Cover with Hole for Vacuum Breaker Use 1/8" NPT plug if need be F-PL-0125
1a	BP-4211-21A	003522	Top Cover (61 & 65) P/N is obsolete - Order BP-4211-21
2	**BP-4211-11**	026801	Top Cover Gasket
3	call for details	003759	Pump Housing
4	call for details	003476	Junction Box Cover
5	call for details	063185	Wire Stop
6	call for details	051810	Machine Screw
	call for details	051808	Machine Screw (Cenex covers)
7	BP-4211-23	066570	Vacuum Breaker Assembly
8	BP-4211-40	066825	Bypass Valve
9	**BP-4211-08**	066686	**Check Valve Assembly**
10	**BP-4211-41**	057394	**Bypass Spring**
11	BP-4211-42	051805	Machine Screw
12	BP-4211-09	049066	O-Ring
13	BP-4211-39	051586	Strainer
14	**BP-4211-56**	003028PG8	**Pump Adapter Kit, 60/61 Pump**
	See BP-4211-56	003028	Base Adapter
15	call for details	010948***	Arm/Bearing Assembly (New 12V)
	BP-4211-55	010946***	Arm/Bearing Assembly (Old 12V)
	call for details	010949***	Arm/Bearing Assembly (New 12V)
	call for details	010947***	Arm/Bearing Assembly (Old 12V)
	call for details	010921	Armature, 12V
	call for details	010922	Armature, 24V
	call for details	011922***	Bearing (New)
	call for details	011832***	Bearing (Old)
16	call for details	052242	Locating Pin
17	No Longer Avail.	015843	**Brush Holder**
Item	**SVI Part #**	**OEM #**	**Description**
18	BP-4211-34	015844	Brush Assembly
19	call for details	052706	Machine Screw
20	**BP-4211-20**	**057395**	**Brush Spring**
21	BP-4211-38	067163	Fiber Washer
22	call for details	051282	Tie Rod
23	call for details	035174	Magnet Barrel Assembly
24	call for details	068953***	Bearing Spring (New)
	call for details	068951***	Bearing Spring (Old)
25	call for details	003468	End Cover
26-31	**BP-4211-13**	032867	**Seal Kit** (includes items 26 thru 31)
26	BP-4211-15	048846	O-Ring
27	BP-4211-18	054131	Seal Ring
28	BP-4211-17	054133	Rotating Seal Ring
29	BP-4211-14	048845	O-Ring
30	BP-4211-19	067166	Washer
31	BP-4211-16	057393	Spring
32	BP-4211-04	051482	Rotor
33	BP-4211-07	067018	Vane
34	BP-4211-05	031316	Key
35	BP-4211-10	049061	O-Ring
36	BP-4214-56	003488	Pump Cover
37	call for details		Meter & Register Assembly
	call for details		Register Assembly Only
	***See Section on 1860 3-Wheel Meter Register for internal parts*		
38	BP-4210-20	027055	Gasket
39	call for details	003645	Flange Outlet
40	call for details	052090	Machine Screw

All names, numbers, symbols and descriptions are used for reference purposes only. It is not implied that any part listed is the product of these manufacturers.

Entire contents copyright © 2022 SVI International, Inc.

60 / 460 Series General Assembly
(continued)

41	call for details	052556	Screw
42			**Motor Protector & Switch Assy.**
	BP-4218-07	037744	(12V) (incl. items 43–55)
	call for details	037746	(24V) (incl. items 43–55)
43	BP-4211-26	031017	Housing - Motor Protector
44	BP-4211-27	039055	Nut
45	BP-4211-28	052707	Machine Screw
46	BP-4211-25	037743	Motor Protector (12V)
	call for details	037745	Motor Protector (24V)
47	BP-4211-29	020896	Retaining Clip
48	BP-4211-30	053665	Screw
49	BP-4211-22	064334	Switch (DPST)
50	BP-4211-31	046957	Switch Plate
51	BP-4211-32	039150	Lock Nut
52	BP-4211-33	039070	Keps Nut
53	call for details	069151	Wire Assembly
54	call for details	069149	Wire Assembly
55	call for details	069150	Wire Assembly
56	BP-4211-44	064352	Switch Cover Assy. (incl. items 57–62)
57	BP-4217-11	038920	Nylock Nut
58	BP-4211-46	069687	Yoke
59	call for details	067164	Spring Washer
60	BP-4211-48	003469	Switch Cover
61	BP-4211-49	043101	Switch Actuator Stop
62	BP-4211-50	054439	Switch Shaft
63	BP-4211-43	014697	Switch Bracket
64	BP-4211-45	038920	Nylock Nut, 5/16-18
65	call for details	000328	Nozzle Boot
66	call for details	051865	Machine Screw
67	call for details	030539	Hose - 5/8 x 12' Softwall
68	BP-4210-108	038475	Nozzle w/ Hook - Diesel
	BP-4210-109	038471	Nozzle w/ Hook - Non-Leaded
	call for details	038511	Hook Assy., EMCO A2000 (incl. set screw - not shown)
69	BP-4215-53	064895	Telescopic Suction
70	BP-4211-37	067162	Brush Support
71	call for details	017391	Cable, Power (not shown)
72	call for details	020750	Strain-Relief Cable (not shown)
	call for details	048521	Filter Kit (optional, Model 61)

*** As of pump S/N 718173 (12V) or S/N 195052 (24V), a design change was made requiring the use of parts marked "New"

60 / 460 Series Motor Brush/Switch Assembly Replacement Kit
OEM #S00063 / SVI # BP-4211-36 (pictured right)

Item	SVI Part #	OEM #	Description
	BP-4211-36	S00063	**Brush/Switch Replacement Kit**
18	BP-4211-34	015844	Brush Assembly
26	BP-4211-15	048846	O-Ring
27	BP-4211-18	054131	Seal Ring
28	BP-4211-17	054133	Rotating Seal Ring
29	BP-4211-14	048845	O-Ring
30	BP-4211-19	067166	Washer
49	BP-4211-22	064334	Switch (DPST)

Repair Kit for 60 / 460 Series
OEM #032893 / SVI # BP-4211-03

Item	SVI Part #	OEM #	Description
	BP-4211-03	032893	**Repair Kit for Series 60**
2	BP-4211-11	026801	Gasket
9	BP-4211-08	066686	Check Valve Assembly
12	BP-4211-09	049066	O-Ring, 1-5/8 x 1-3/4
26-31	**BP-4211-13**	032867	**Seal Kit** (includes items 26 thru 31)
32	BP-4211-04	051482	Rotor-Machining
33	BP-4211-07	067018	Vane for 60 series
34	BP-4211-05	031316	Key
35	BP-4211-10	049061	O-Ring, 2-1/4 x 2-7/16
38	BP-4210-20	027055	Gasket-Inlet/Outlet

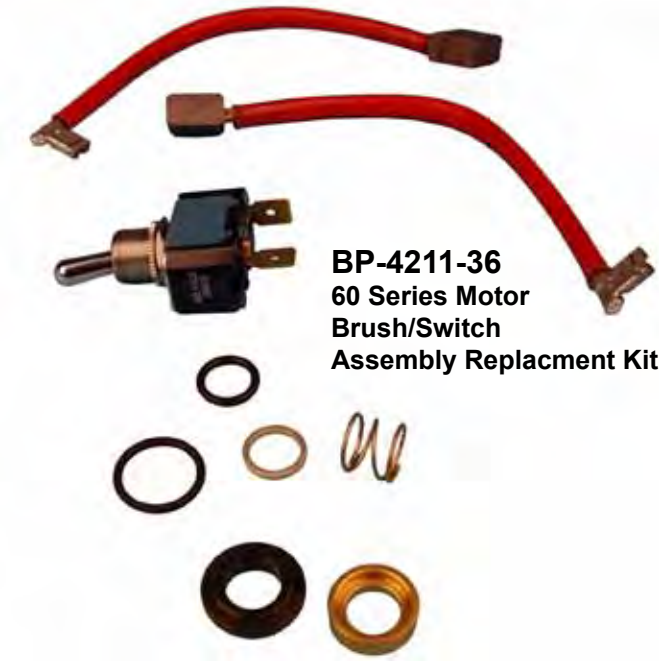

BP-4211-36
60 Series Motor Brush/Switch Assembly Replacment Kit

All names, numbers, symbols and descriptions are used for reference purposes only. It is not implied that any part listed is the product of these manufacturers.

Entire contents copyright © 2022 SVI International, Inc.

70 / 470 Series - Assembly

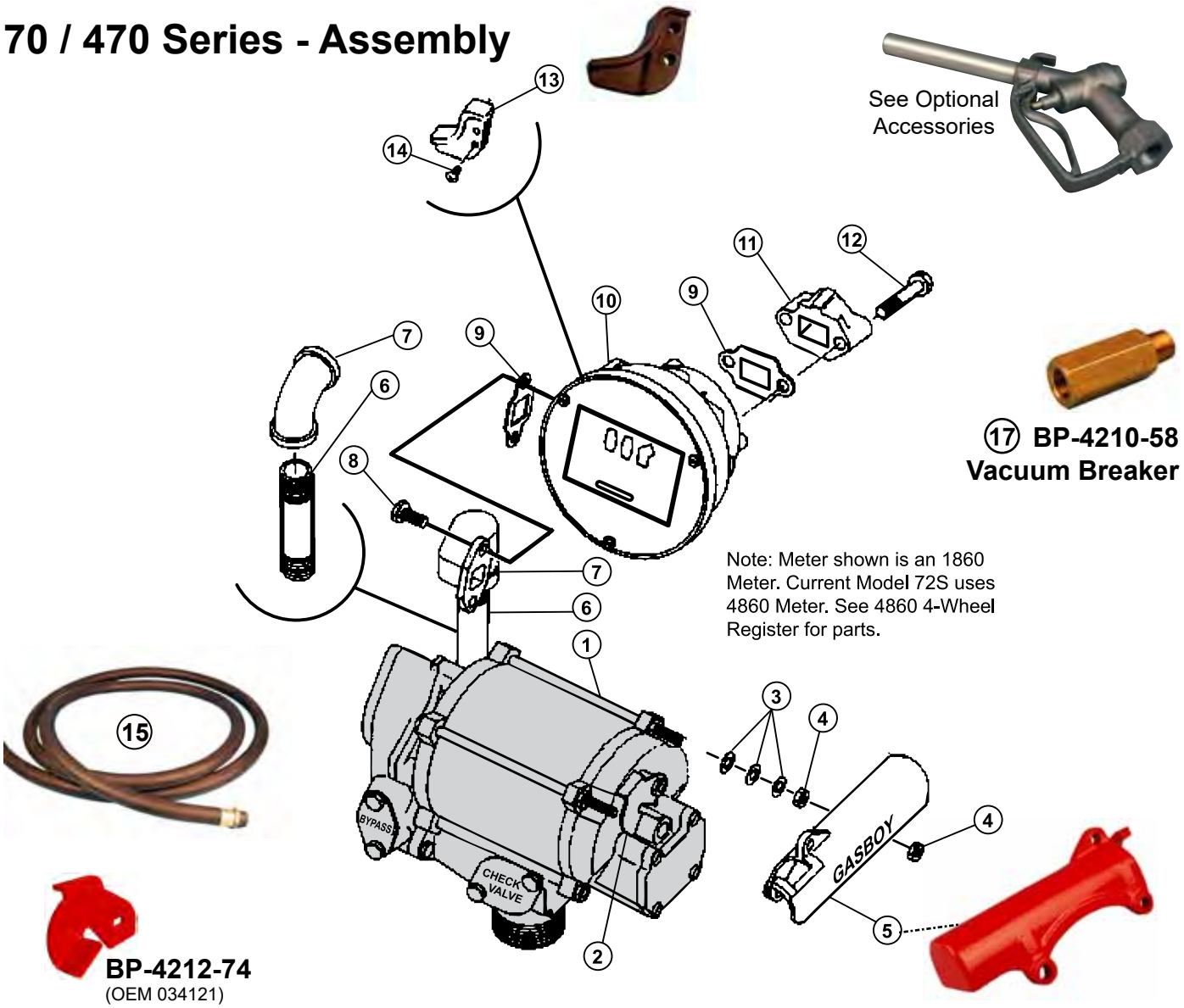

17 BP-4210-58
Vacuum Breaker

BP-4212-74
(OEM 034121)
Motor Switch Lever

Item	SVI Part #	OEM #	Description
1	**BP-4218-20R**	**F37332**	**1/3 HP Motor 60 Hz. 48 Frame (Red)** (use suffix 20B for beige and 20W for white)
	No longer available	F37325	1/3 HP Motor 50/60 Hz. 48 Frame (NLA)
	BP-4218-22	F37461	1/3 HP Motor 50 Hz. 48 Frame
2	BP-4212-74	034121	Motor Switch Lever (old style units)
3	call for details	068020	Washer
		K65235 33	Washer
4	F-KN-0312-18	039085	Hex Nut
		Q12068 06	Hex Nut with Lockwasher
5	BP-4218-30R	000325	Nozzle Boot (R = Red)
5	BP-4218-30B	000325	Nozzle Boot (B=Beige)
5	BP-4218-30W	000325	Nozzle Boot (W=White)
6	BP-4210-106	044089	3/4" x 6-7/8" Pipe Nipple
		R11496 106	3/4" x 6-7/8" Pipe Nipple
7	BP-4212-112	003597	Flanged Inlet, 72S
	BP-4210-105	024934	Elbow, 72X & 73
8	call for details	052000	Screw
		K47659	Screw

Item	SVI Part #	OEM #	Description
9	BP-4210-20	027055	Gasket
		M05618B001	Gasket
10	call for details		Meter Register Assembly
	***See Section on 1860 3-Wheel Meter Register for internal parts*		
11	BP-4212-110	003542	3/4" Horiz. Dschg for Vacuum Breaker
12	BP-4218-04	052105	Screw
13	BP-4212-29	029410	Reset Lever Handle (only used with Vapor Recovery)
14	call for details	053900	Reset Lever Screw (only used on Model 72)
15	call for details	030539	Hose, 5/8 x 12 ft. (not shown)
	BP-4210-107	**030605**	**Hose, 3/4" x 12 ft. (pictured)**
	(works on Gasboy, Fill-Rite & Great Plains)		
16	BP-4210-109	038471	Nozzle, 3/4" EBW-unl. (not shown)
17	BP-4210-58	066534	Vacuum Breaker (not shown)

continues on following page

All names, numbers, symbols and descriptions are used for reference purposes only. It is not implied that any part listed is the product of these manufacturers.

Entire contents copyright © 2022 SVI International, Inc.

70 / 470 Series - Assembly

Optional Accessories

call for details	032814	Filter Kit (1820/1820R) contains * below
call for details	*017270	Bushing, 3/4" x 1"
	*K02297	Bushing, 3/4" x 1"
call for details	*043960	Pipe Tube, 3/4" x 2"
	*R11496 23	Pipe Tube, 3/4" x 2"
call for details	*003043	Adapter, Filter 3/4"
call for details	*024940	Elbow, Street 3/4" x 90
call for details	*026005	Filter, Wix 24006 Dsl/Gas
call for details	030340	Hose - 3/4" x 14 ft.
	030565	Hose - 3/4" x 15 ft.
call for details	030355	Hose - 3/4" x 15 ft.
	030566	Hose - 1" x 15 ft.
call for details	037461	Motor for 50 cycle, 230V
BP-4210-109	038471	Nozzle - 3/4" Manual - Unleaded
BP-4210-108	038475	Nozzle - 3/4" Manual - Diesel
call for details	038519	Nozzle - Automatic - Unleaded - Husky
call for details	038520	Nozzle - Automatic - Diesel - Husky
BP-4215-18	038510	Hook Assembly, OPW 11A
call for details	038511	Hook Assembly, EMCO A2000
call for details	038503	Hook Assembly, OPW 7H
BP-4210-59	032700	Kit, Vacuum Breaker Tubing and Fittings

Series 1820 Assembly

***Slimline 390 Pump**

See 1800 Series Pumps for part numbers.
Slimline 390 has same internal parts, with different housing.

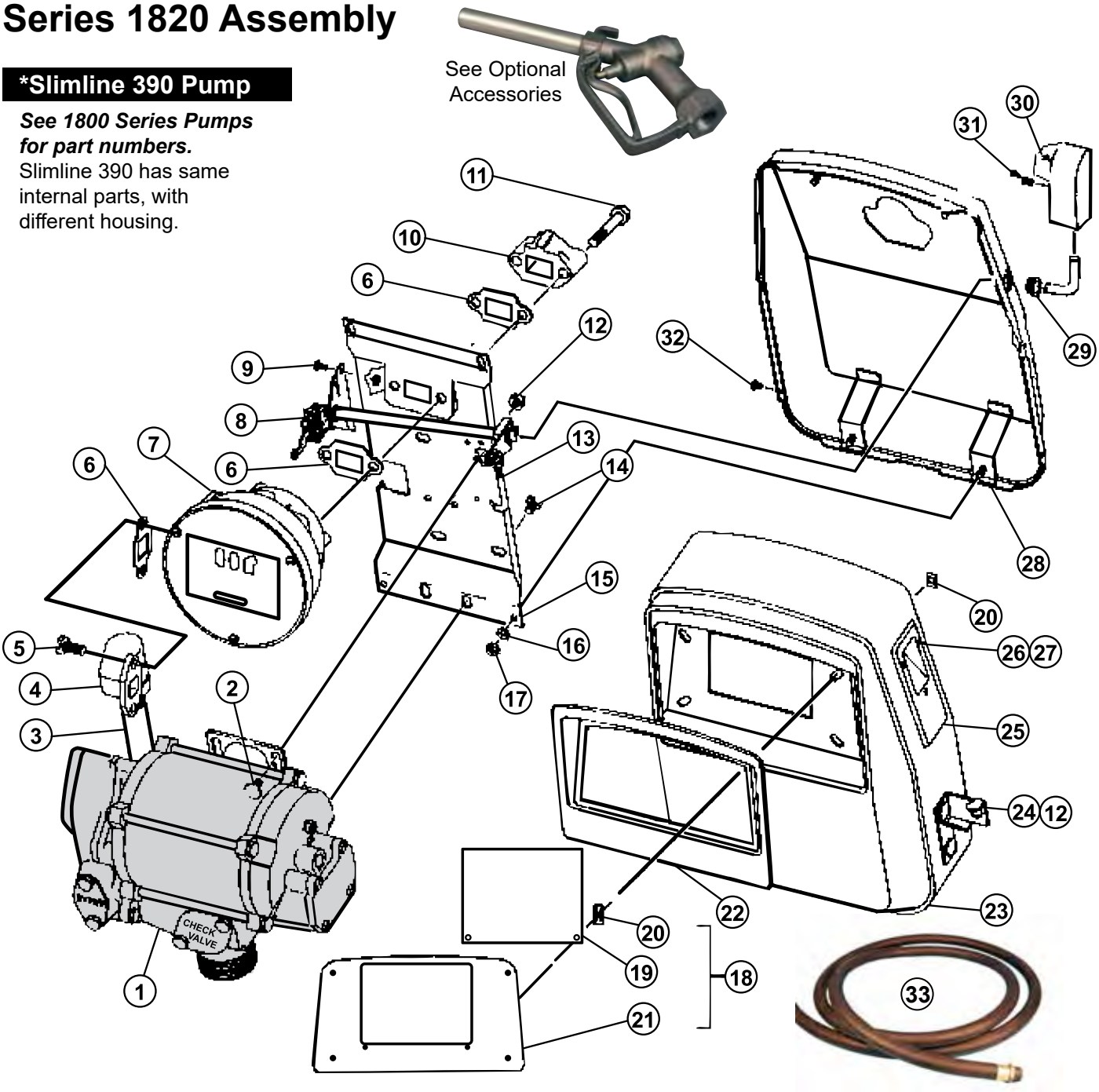

All names, numbers, symbols and descriptions are used for reference purposes only. It is not implied that any part listed is the product of these manufacturers.

Entire contents copyright © 2022 SVI International, Inc.

Series 1820 Assembly (continued)

Item	SVI Part #	OEM #	Description
1	BP-4218-28	F37697	1/3 HP Motor 60 Hz. 48 Frame
2	call for details	013030	Carriage Bolt
3	BP-4210-106	044089	3/4" x 6-7/8 Nipple
		R11496 106	3/4" x 6-7/8 Nipple
4	BP-4212-112	003597	Flanged Inlet (72S & 1820)
	call for details	003601	Flanged Inlet (1820R)
5	call for details	052000	Cap Screw
		K47659	Cap Screw
6	BP-4210-20	027055	Gasket
		M05618B001	Gasket
7	call for details		Meter-Register Assembly
	***See Section on 1860 3-Wheel Meter Register for internal parts*		
8	call for details	054654	Control Shaft Assembly
9	call for details	052855	Machine Screw
		Q11560 53	Machine Screw
10	BP-4212-110	003542	Horiz. Dischg-3/4", for Vacuum Breaker
	BP-4215-33	003544	Horiz. Dischg-1" for Vacuum Breaker
		003645	Horiz. Dischg (1820R)
11	BP-4218-04	052105	Machine Screw, Horiz. Dischg
	BP-4212-111	K04395	Machine Screw, 3/8-16 x 2
	call for details	052555	Machine Screw, Flgd Dischg
12	call for details	038605	Keps Lock Nut
		Q12068 03	Keps Lock Nut
13	call for details	051206	Switch Rod Assembly
14	BP-4214-26	051880	Cap Screw 5/16-16 x 1/2 HHCS
		Q10624 13	Cap Screw

Optional Accessories

	call for details	032814	Filter Kit (1820/1820R) Contains * items below
	call for details	*017270	Bushing, 3/4" x 1"
	call for details	*043960	Pipe Tube, 3/4" x 2"
		*R11496 23	Pipe Tube, 3/4" x 2"
	call for details	*003043	Adapter, Filter 3/4"
	call for details	*024940	Elbow, Street 3/4" x 90
		*K21703	Elbow, Street 3/4" x 90
	call for details	*026005	Filter, Wix 24006 Dsl/Gas
	call for details	030340	Hose, 3/4" x 14 ft.
		030565	Hose, 3/4" x 15 ft.
	call for details	030355	Hose, 3/4" x 15 ft.
		030366	Hose, 1" x 15 ft.
	BP-4218-22	037461	Motor for 50 cycle, 230V
	BP-4210-109	038471	Nozzle - 3/4" Manual - Unleaded
	BP-4210-108	038475	Nozzle - 3/4" Manual - Diesel
	call for details	038519	Nozzle - Automatic - Unleaded - Husky
	call for details	038520	Nozzle - Automatic - Diesel - Husky
	BP-4215-18	038510	Hook Assy., OPW 11A
	call for details	038511	Hook Assy., EMCO A2000
	call for details	038503	Hook Assy., OPW 7H

Vacuum Breaker Tubing Kit

Item	SVI Part #	OEM #	Description
KIT	**BP-4210-59**	**032700**	**Vacuum Breaker Tubing Kit**
1	BP-4210-59E	065620	1/4T x 1/8 NPT Fitting
2	BP-4210-59A	064805	2 x 2 x 3/4 Tee
3	BP-4210-59B	044946	2" Nipple x 3" Lg.
4	BP-4210-59D	066086	1/4 Copper Tubing
5	BP-4210-59C	017286	1/8 x 3/4 Bushing

Item	SVI Part #	OEM #	Description
15	call for details	063970	Pump and Meter Support
16	call for details	068891	1/4 Lock Washer
17	F-HN-0250-20	038860	1/4-20 Hex Nut
18	BP-4210-83	032912	Dial Face **Kit** (consists of 19, 20 & 21)
19	BP-4210-84NS		Dial Glass (plastic) 1820 new style SVI
	BP-4210-84	028850	Dial Glass (plastic) 1820 new style
	BP-4210-82		Dial Glass (plastic) 1820 old style
20	BP-4210-85	039461	Speed Nut
21	BP-4210-81	025393	Dial Face Assembly
22	BP-4215-56	012265	Bezel
23	call for details	040630	Front Panel Assembly
24	BP-4215-06	029620	Nozzle Hanger
	BP-4210-68	029590	Nozzle Hanger - Automatic Nozzle
25	BP-4217-39	003820	Scuff Plate
26	call for details	052856	Machine Screw
27	BP-4211-33	039070	Keps Lock Nut
		Q12068 03	Keps Lock Nut
28	call for details	041545	Rear Panel Assembly
29	call for details	039815	Nyliner Bearing
30	call for details	003717	Control Lever
31	call for details	053170	Set Screw
32	call for details	053725	Self-Tapping Screw
33	call for details	030539	Hose-5/8" x 12 ft. (not shown)
	BP-4210-107	**030605**	**Hose 3/4" x 12 ft. (pictured)**
		(works on Gasboy, Fill-Rite & Great Plains)	
34	BP-4210-109	038471	Nozzle-Manual Unl. (not shown)
--	BP-4210-58	066534	Vacuum Breaker (see image below)

Vacuum Breaker Tubing

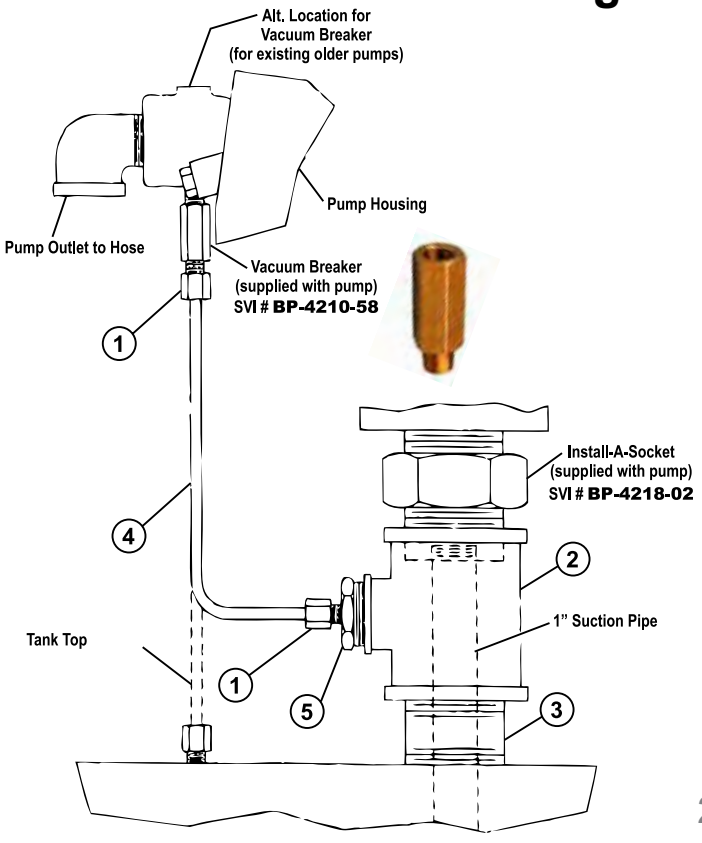

All names, numbers, symbols and descriptions are used for reference purposes only. It is not implied that any part listed is the product of these manufacturers.

Entire contents copyright © 2022 SVI International, Inc.

Series 70 / 470 & 1820 Direct Drive Motor-Pump Assembly

Vanes
BP-4210-08-5

Rotor
BP-4210-22

BP-4210-23

There are two typical culprits for why the pump will lose its prime—Most likely the check valve is not functioning properly or the vanes have a very excessive amount of wear. So, you would replace with a 5-pack of vanes or a new check valve assembly.

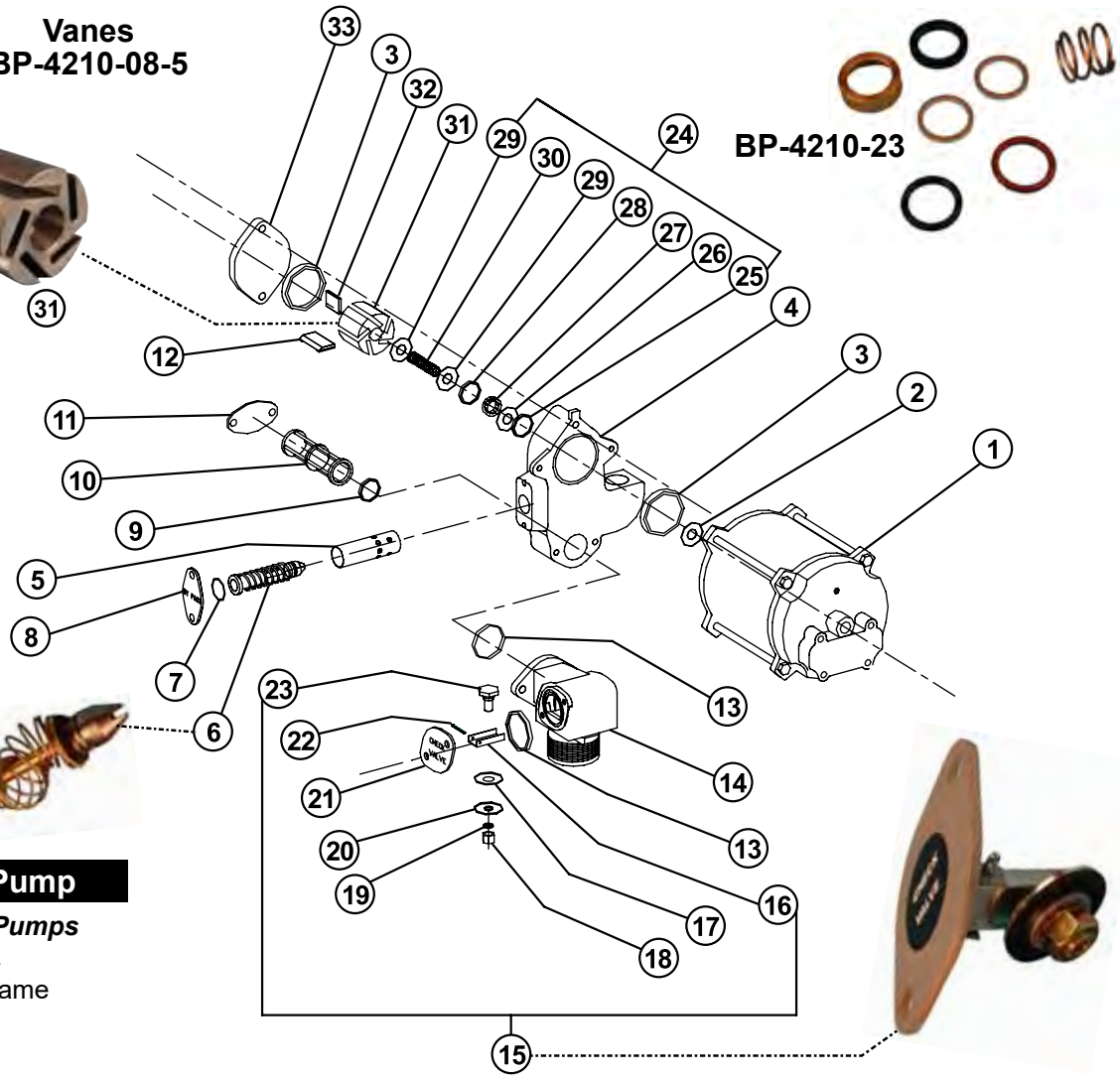

***Slimline 390 Pump**

See 1800 Series Pumps for part numbers.
Slimline 390 has same internal parts, with different housing.

Item	SVI Part #	OEM #	Description
1	BP-4218-20R	F37332	Motor, 115V, 60 Cycle, 70 Series (Red) (use suffix 20B for beige and 20W for white)
	BP-4218-28	F37697	Motor, 115V, 60 cycle, 1800 Series
	No longer available	F37325	1/3 HP Motor 50/60 Hz., 48 Frame, 70 Series
	BP-4218-24	F37616	Motor, 230V, 50 cycle, 70 Series
	BP-4218-22	F37461	Motor, 230V, 50 cycle, 1800 Series
2	BP-4210-86	049525	Slinger Ring
3	BP-4210-27	049004	Square-Ring
4	BP-4210-100	003210	Pump Block
5	BP-4210-104	065725	Tube
6	BP-4210-80	062335	By-Pass Stem Assembly
7	BP-4210-24	049001	Square Ring
8	BP-4210-103	022315	By-Pass Cover
9	BP-4210-25	049002	Square-Ring
10	BP-4210-12	063268	Strainer, 100 Mesh, Gasoline
	BP-4210-11		Strainer, 30 Mesh, Diesel
11	BP-4210-103	022900	Strainer Cover
12	**BP-4210-08**	067030	**Vane**
	BP-4210-08-5		**Vanes (5-Pack)**
13	BP-4210-26	049003	Square-Ring
14	BP-4210-101	003065	Pump Base

Item	SVI Part #	OEM #	Description
15	BP-4210-28	066655	Check Valve Assembly (items 16–23)
16	call for details	029155	Valve Guide
	call for details	029005	Valve Guide, 1800R
17	call for details	068680	Washer
18	call for details	038980	Hex Jam Nut
19	call for details	068650	Washer
20	call for details	024356	Valve Disc
21	call for details	022271	Check Valve Cover Assembly
22	call for details	042370	Cotter Pin
23	call for details	062620	Valve Stem w/Relief Valve
	call for details	*062365	Relief Valve
24	BP-4210-23	054024	**Seal Kit** (items 25–30)
25	BP-4210-36	048956	O-Ring
26	BP-4210-35	048820	Floating Seal Ring-Carbon
27	BP-4210-34	049510	Rotating Seal Ring
28	BP-4210-33	048941	O-Ring .612 ID
29	BP-4210-32	067210	Washer
30	BP-4210-31	057956	Spring
31	BP-4210-22	051475	Rotor
32	BP-4210-21	031285	Key, 70 Series
33	BP-4210-102	003490	Pump Cover

All names, numbers, symbols and descriptions are used for reference purposes only. It is not implied that any part listed is the product of these manufacturers.

Entire contents copyright © 2022 SVI International, Inc.

Series 70 / 470 & 1820 Installation Parts
(pictured right)

Item	SVI Part #	OEM #	Description
1	BP-4218-02	003835	Install-A-Socket
2	call for details	021970	2" Coupling
3	call for details	045010	2" x 40" Pipe (Underground)
4	call for details	045535	2" x 30" Pipe (Pedestal)
5	call for details	044380	1" x 32-1/2" Suction Pipe
		R11495 108	1" x 32-1/2" Suction Pipe
6	call for details	053320	Set Screws
7	call for details	066445	1" Union
		K07797	1" Union
8	call for details	003055	Pedestal Base

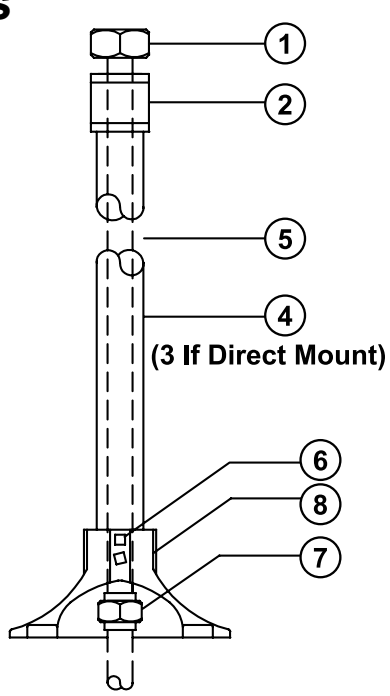

Optional Kits for Series 70 / 470 and 1800 Pumps

SVI Part #	OEM #	Description
call for details	032765	Kit, Wall-Mount 1820/1820R
call for details	032711	Kit, Filter - 1820R (for use with wall mount kit 032765)
call for details	032712	Kit, Filter 1820 (For use with wall mount kit 032765)
call for details	032814	Kit, Filter 1820/1820R Diesel/Gas
BP-4210-01	032888	Kit, Repair 70/1800
call for details	032701	Kit, Vacuum Breaker 1820R
BP-4210-59	032700	Kit, Vacuum Breaker Tubing and Fittings (Does not include Vacuum Breaker)
call for details	047575	Kit, Vapor Recovery (72VR)
BP-4212-02	032889	Register Rebuild Kit, 1860
BP-4212-03	033026	Register Rebuild Kit, 4860

Series 70/470, 1800 and 390 Repair Kit
(pictured below)

Item	SVI Part #	OEM #	Description
	BP-4210-01	**032888**	**Repair Kit for Series 70, 1800 & 390**
1	BP-4210-27	049004	O-Ring, Square Cut, #7-230
2	BP-4210-21	031285	Rotor Key
3	BP-4210-22	051475	Rotor
4	BP-4210-23	054024	Seal Kit, Series 70 & 1820
5	BP-4210-20	027055	Gasket
6	BP-4210-26	049003	O-Ring, Square Cut, #7-224
7	BP-4210-28	066655	Check Valve Assembly
8	BP-4210-24	049001	O-Ring, Square Cut, #7-214
9	BP-4210-25	049002	O-Ring, Square Cut, #7-218
10	BP-4210-08	067030	Vane - 1820

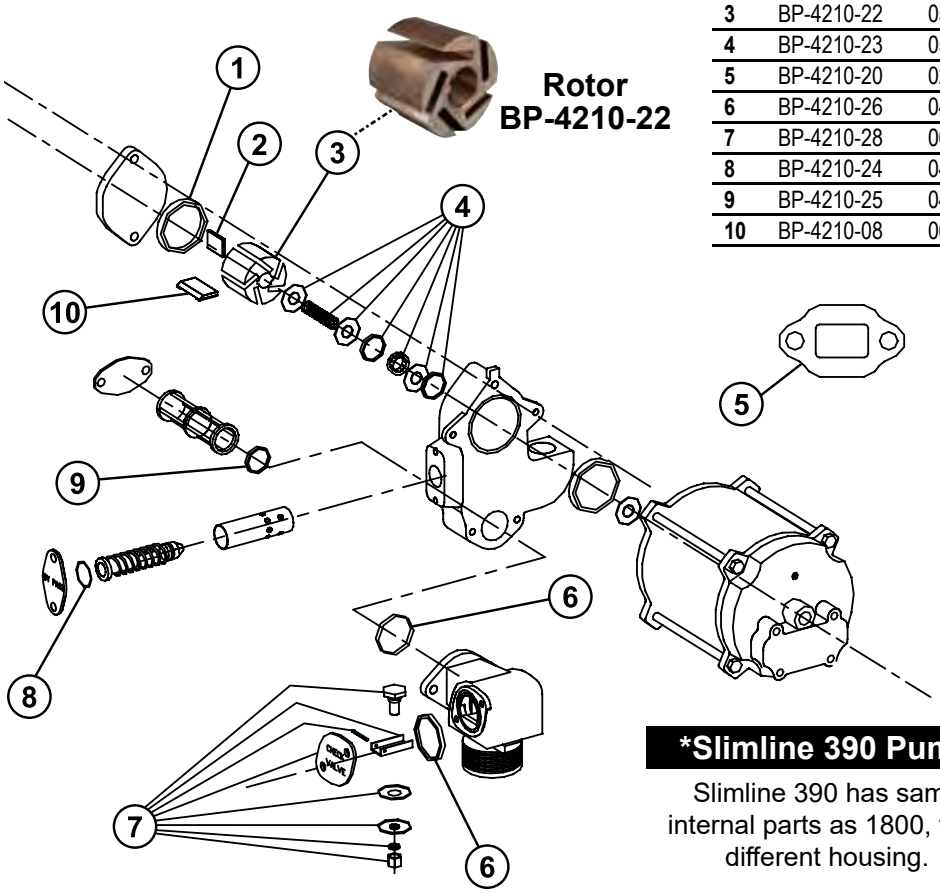

***Slimline 390 Pump**

Slimline 390 has same internal parts as 1800, with different housing.

All names, numbers, symbols and descriptions are used for reference purposes only. It is not implied that any part listed is the product of these manufacturers.

Entire contents copyright © 2022 SVI International, Inc.

Model 1820 Register Setback and Switch Linkage Assembly Parts List

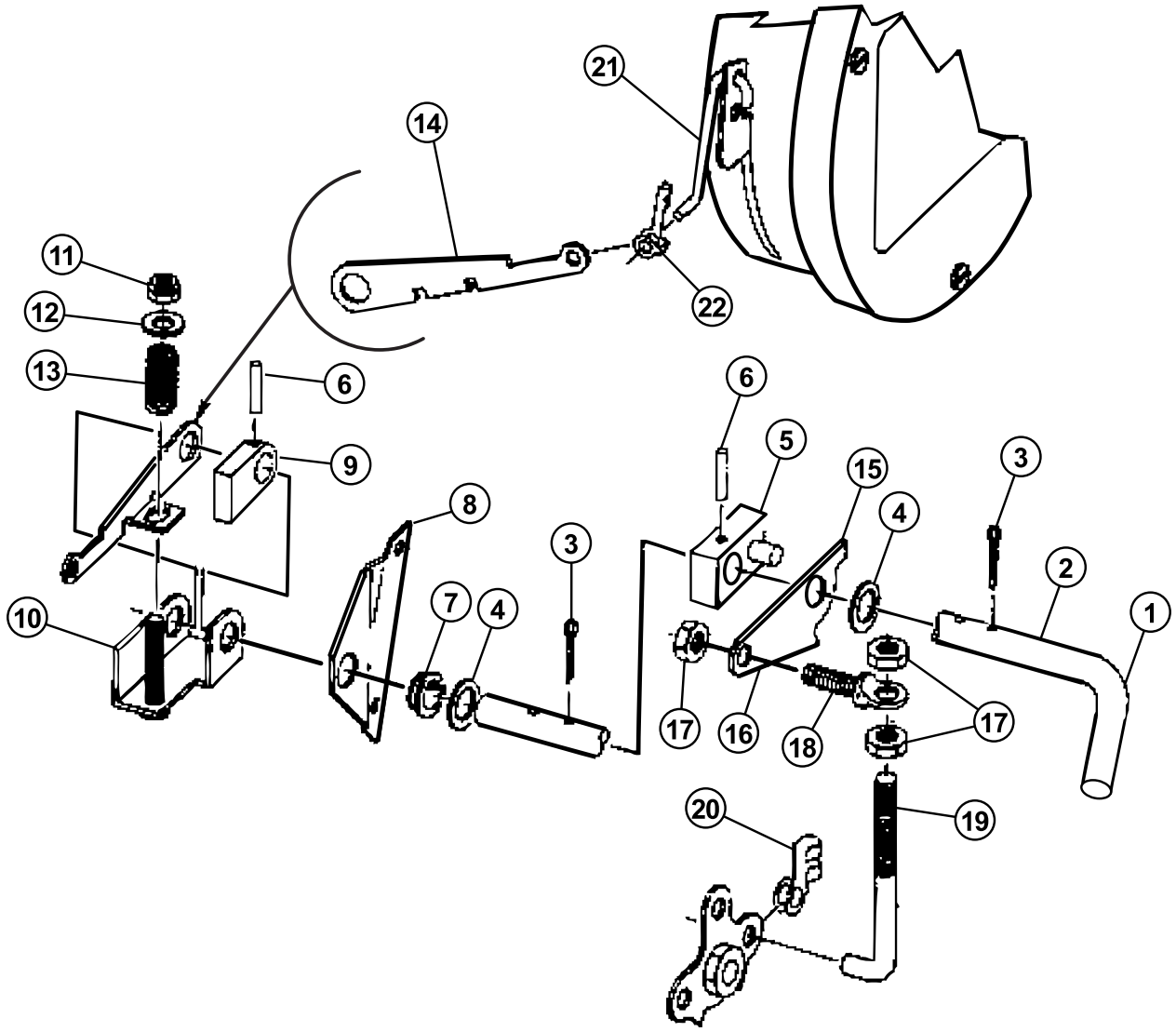

Item	SVI Part #	OEM #	Description
1	call for details	054654	Control Shaft (incl. items 2–14)
2	call for details	054610	Control Shaft
3	call for details	042355	Cotter Pin
		K02125	Cotter Pin
4	call for details	068635	Washer
5	call for details	012520	Drive Block Assembly
6	call for details	042596	Driv-Lok Pin
		K53911	Driv-Lok Pin
7	call for details	039815	Nyliner Bearing
8	call for details	011870	Shaft Bracket
9	call for details	012641	Drive Block, Reset
10	call for details	024776	Reset Arm Driver Assembly

Item	SVI Part #	OEM #	Description
11	call for details	038875	Hex Nut
12	call for details	067270	Washer
13	call for details	057925	Spring Reset
14	call for details	010827	Reset Arm
15	call for details	051206	Switch Rod Assembly (incl. items 16–19)
16	call for details	034155	Switch Lever, 1800
17	call for details	038905	Hex Lock Nut
18	call for details	051730	Adjusting Screw
19	BP-4215-04	050755	Switch Rod
20	BP-4210-90	021040	Throttle Clip - LH
21	BP-4210-79	034804	Reset Link
22	BP-4210-91	020935	Throttle Clip - RH

All names, numbers, symbols and descriptions are used for reference purposes only. It is not implied that any part listed is the product of these manufacturers.

Entire contents copyright © 2022 SVI International, Inc.

Model 1820R

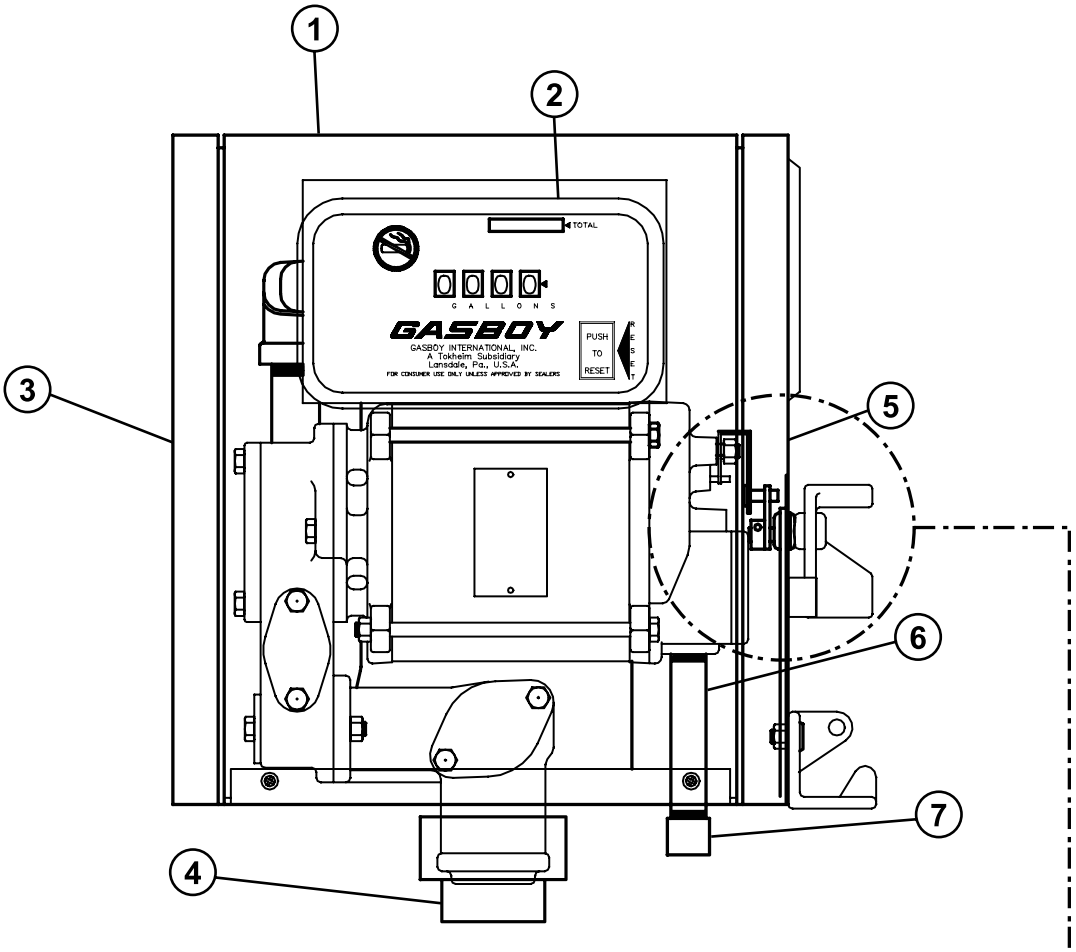

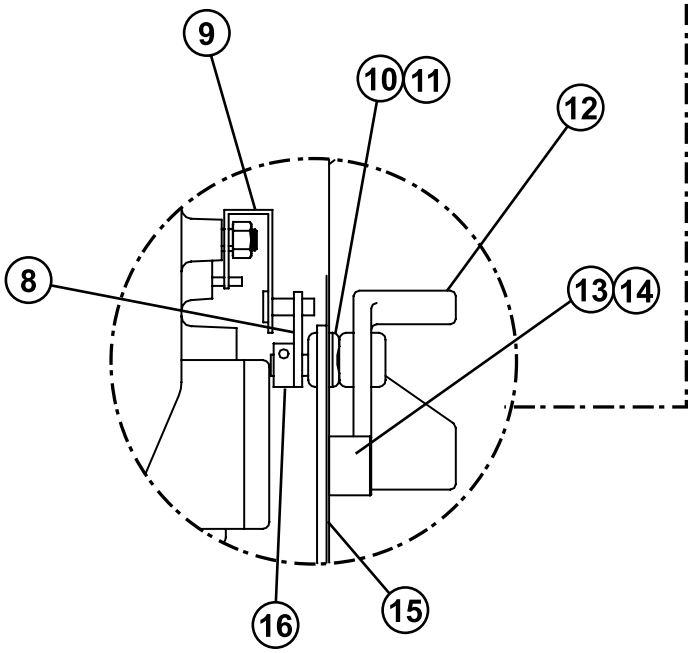

Item	SVI Part #	OEM #	Description
1	call for details	022194	Cover-1820R, CRS
	call for details	022971	Cover-1820R, SS
2	call for details	012267	Bezel
3	call for details	022193	Panel Assembly-Left, CRS
		M04559A001	Panel Assembly-Left, CRS
	call for details	022970	Panel Assembly-Left, SS
		M04559A002	Panel Assembly-Left, SS
	call for details	022988	Panel Assembly-Left, CRS, Pulser
		M04559A003	Panel Assembly-Left, CRS, Pulser
	call for details	022979	Panel Assembly-Left, SS, Pulser
		M04559A004	Panel Assembly-Left, SS, Pulser
4	**BP-4218-02**	**003835**	**Install-A-Socket**
5	call for details	041384	Panel Assembly-Right, CRS
		M04560A001	Panel Assembly-Right, CRS
	call for details	041383	Panel Assembly-Right, SS
		M04560A002	Panel Assembly-Right, SS
6	call for details	021374	Conduit 1/2 x 5
7	call for details	017931	Thread Protector 1/2" MNPT
8	call for details	017578	Cam Assembly
		M04446A002	Cam Assembly
9	call for details	033748	Switch Actuator Assembly
10	call for details	068080	Washer - 5/16 Plated
11	call for details	068281	Washer - Spring 7/16
12	call for details	051072	Switch Arm Assembly
13	call for details	063209	Eccentric Stop
14	call for details	052314	Flathead Screw
15	call for details	026575	Frame Assembly
		M04610A001	Frame Assembly
16	call for details	053516	Set Screw, Soc. Hd., 10-32 x 1/4 HF
17	call for details	040754	Panel-Back, CRS (not shown)
		M04558B001	Panel-Back, CRS (not shown)
	call for details	040811	Panel-Back, SS (not shown)
		M04558B002	Panel-Back, SS (not shown)

All names, numbers, symbols and descriptions are used for reference purposes only. It is not implied that any part listed is the product of these manufacturers.

Entire contents copyright © 2022 SVI International, Inc.

Model 1820R Pulser and Junction Box Assemblies

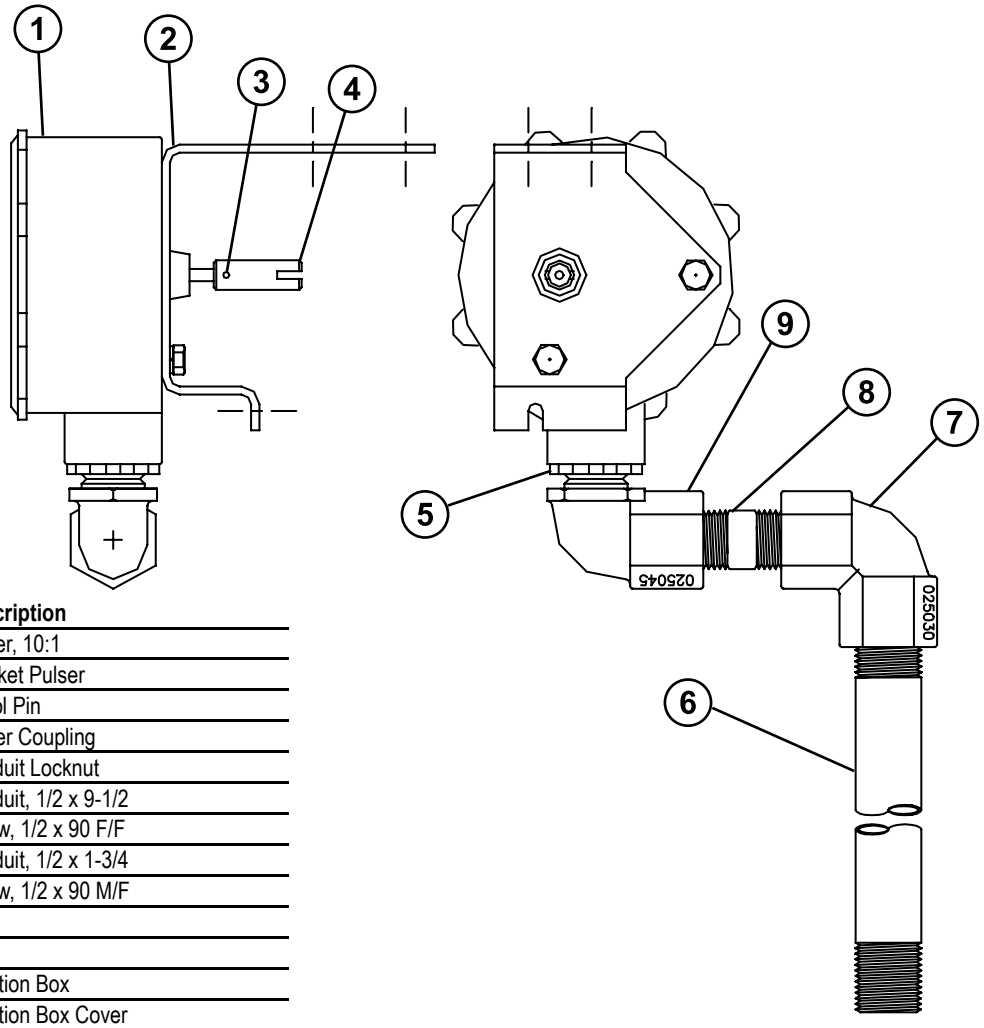

Item	SVI Part #	OEM #	Description
1	call for details	021788	Pulser, 10:1
2	call for details	014646	Bracket Pulser
3	call for details	043211	Spirol Pin
4	call for details	021943	Pulser Coupling
5	call for details	039130	Conduit Locknut
6	call for details	021378	Conduit, 1/2 x 9-1/2
7	call for details	025030	Elbow, 1/2 x 90 F/F
8	call for details	021532	Conduit, 1/2 x 1-3/4
9	call for details	025045	Elbow, 1/2 x 90 M/F

NOT SHOWN:			
	call for details	003340	Junction Box
	call for details	003515	Junction Box Cover
	call for details	067506	Washer, Brass Cupped
		067500	Washer, Brass Cupped
	call for details	052976	Screw, 10-32 x 3/8 Slotted Ground

All names, numbers, symbols and descriptions are used for reference purposes only. It is not implied that any part listed is the product of these manufacturers.

Entire contents copyright © 2022 SVI International, Inc.

Model 74 & 71 Direct Drive Motor-Pump Assembly

and Tokheim 474 & 471

Vanes 5-Pack
(12) BP-4210-08-5

BP-4210-23

Rotor
BP-4210-22

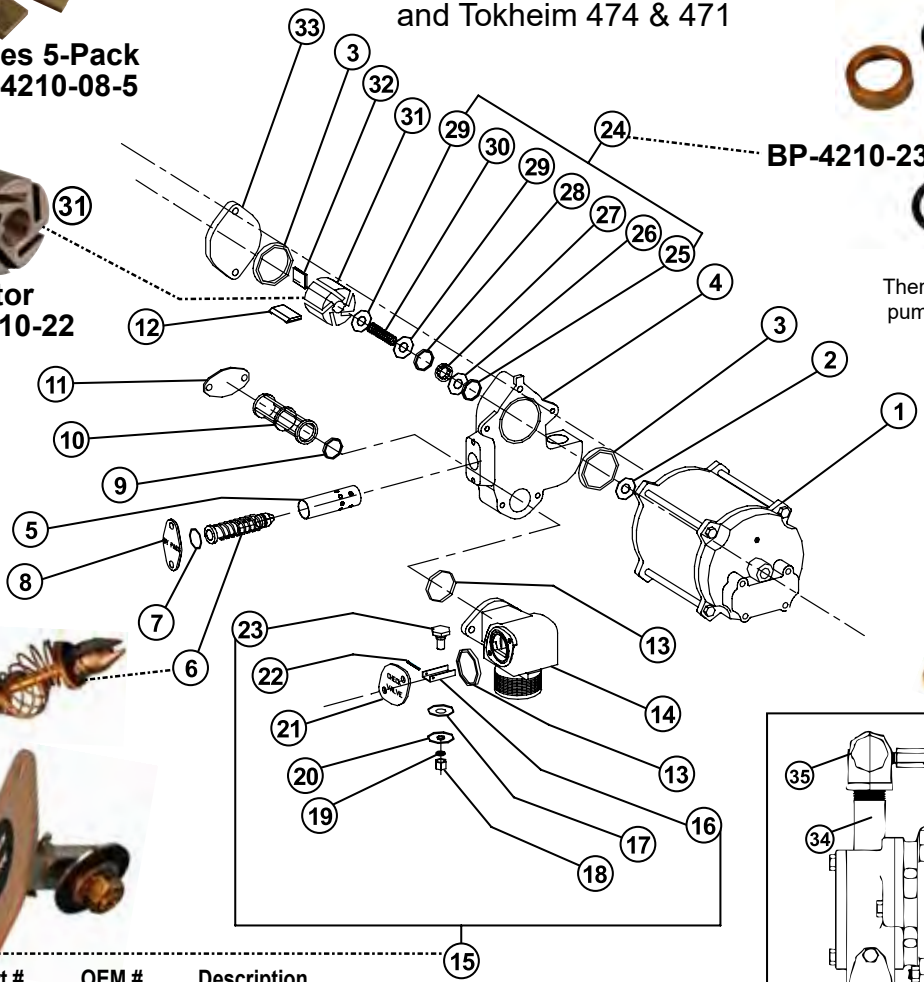

There are two typical culprits for why the pump will lose its prime—Most likely the check valve is not functioning properly or the vanes have a very excessive amount of wear. So, you would replace with a 5-pack of vanes or a new check valve assembly.

(36) BP-4210-58
Vacuum Breaker

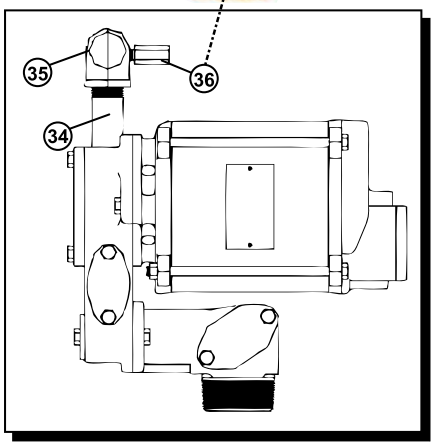

Item	SVI Part #	OEM #	Description
1	BP-4218-20R	F37332	Motor, 115V, 60 Cycle, 70 Series (Red) (use suffix 20B for beige and 20W for white)
	BP-4218-24	F37616	Motor, 230V, 50 cycle, 70 Series
	No longer available	F37325	Motor, 230V, 50/60 cycle, 70 Series
2	BP-4210-86	049525	Slinger Ring
3	BP-4210-27	049004	Square-Ring
4	BP-4210-100	003210	Pump Block
5	BP-4210-104	065725	Tube
6	BP-4210-80	062335	By-Pass Stem Assembly
7	BP-4210-24	049001	Square Ring
8	BP-4210-103	022315	By-Pass Cover
9	BP-4210-25	049002	Square-Ring
10	BP-4210-12	063268	Strainer, 100 Mesh, Gasoline
	BP-4210-11	063266	Strainer, 30 Mesh, Diesel
11	BP-4210-103	022900	Strainer Cover
12	**BP-4210-08**	067030	**Vane**
--	**BP-4210-08-5**	067030-5	**Vanes (5-Pack)**
13	BP-4210-26	049003	Square-Ring
14	BP-4210-101	003065	Pump Base
15	BP-4210-28	066655	Check Valve Assembly (items 16–23)
16	call for details	029155	Valve Guide
	call for details	029005	Valve Guide, 1800R
17	call for details	068680	Washer
18	call for details	038980	Hex Jam Nut
19	call for details	068650	Washer

Item	SVI Part #	OEM #	Description
20	call for details	024356	Valve Disc
21	call for details	022271	Check Valve Cover Assembly
22	call for details	042370	Cotter Pin
23	call for details	062620	Valve Stem w/Relief Valve
	call for details	*062365	Relief Valve
24	BP-4210-23	054024	Seal Group (items 25–30)
25	BP-4210-36	048956	O-Ring
26	BP-4210-35	048820	Floating Seal Ring-Carbon
27	BP-4210-34	049510	Rotating Seal Ring
28	BP-4210-33	048941	O-Ring .612 ID
29	BP-4210-32	067210	Washer
30	BP-4210-31	057956	Spring
31	BP-4210-22	051475	Rotor
32	BP-4210-21	031285	Key, 70 Series
33	BP-4210-102	003490	Pump Cover
34	call for details	R11496-106	Pipe, 3/4" x 6-7/8
35	BP-4210-105	024934	Elbow
36	BP-4210-58	066534	Vacuum Breaker

All names, numbers, symbols and descriptions are used for reference purposes only. It is not implied that any part listed is the product of these manufacturers.

Entire contents copyright © 2022 SVI International, Inc.

Pulser Assembly - Model 71

OEM #049912

BP-4210-30KP
(includes dial glass; not pictured)

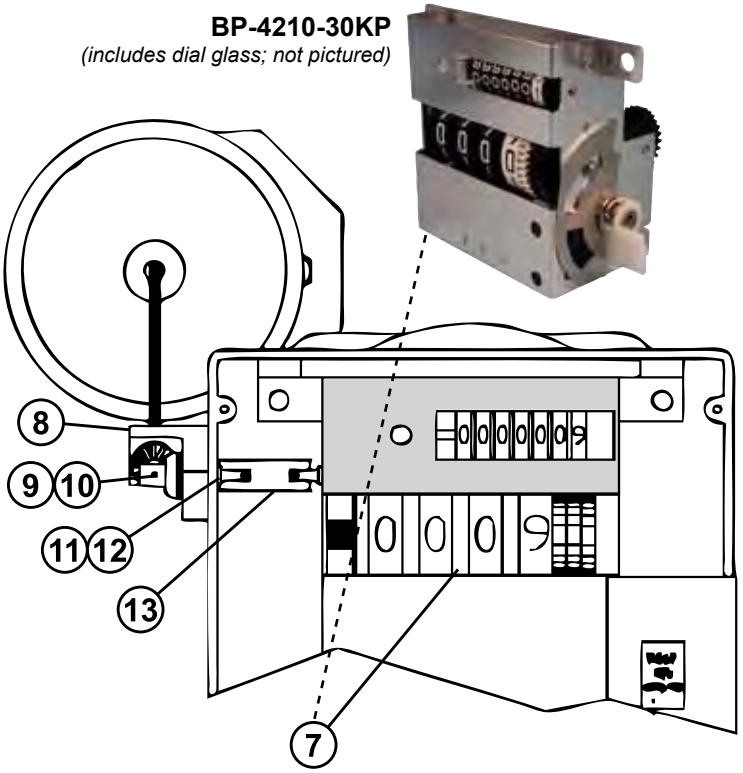

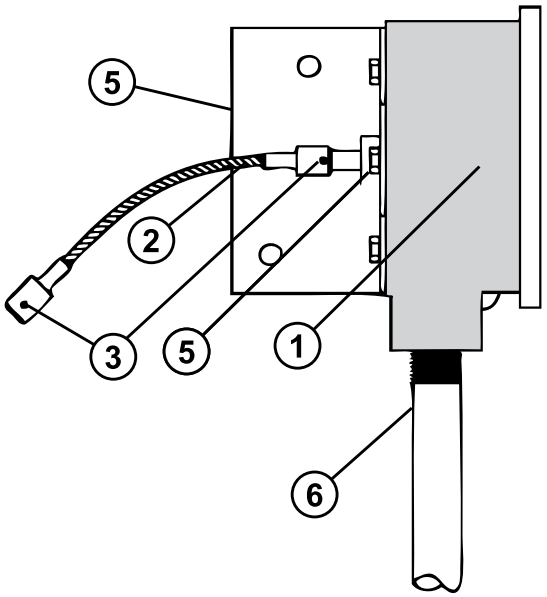

Item	SVI Part #	OEM #	Description
1	call for details	021788	Pulser, 10:1 VR
2	call for details	017377	Pulser Drive Cable
3	call for details	K02137-26	Cotter Pin 1/16 x 5/8
4	call for details	K05287	Screw 1/4-20 x 1/2 HHC
5	call for details	015919	Bracket, Pulser
6	call for details	021517	Conduit, 1/2 x 11
7	call for details		Complete Register Assembly
	BP-4210-30KP	S00758	Meter Register Assembly (w/ Dial Glass)
	BP-4210-30LS	S00766	Reg. Assy., Ext. Shaft/Pul (w/ Dial Glass)
	BP-4210-30	048461	Register Assembly (without Dial Glass)
	BP-4210-30LSRC	S00765	Register Assy., Ext. Shaft (incl. glass)

Item	SVI Part #	OEM #	Description
8	call for details	027049	Block & Miter Gear Assy. (Does not include items 9 & 10)
9	call for details	027048	Miter Gear
10	call for details	042431	Groove Pin, 1/16 x 1/4
11	call for details	054035	Pulser Drive Shaft (see note below)
12	F-RP-0052-0375	043210	Roll Pin, 0.052 Dia. x 3/8" Long
13	BP-4210-92	054036	Pulser Drive Coupling

Note: *For units with serial number 490100 and below, you must also order OEM part number 054036 pulser drive coupling and 043210 roll pin.*

Inlet Assembly - Model 71

Item	SVI Part #	OEM #	Description
1	BP-4215-17	003560	Elbow, Flanged, 1"
2	BP-4210-20	M05618B001	Gasket, Inlet/Outlet
3	call for details	R11935-20	Pipe, TBE, 1 x 1-1/2
4	call for details	067034	Solenoid Valve, 1" Skinner 2-Stg. 115V
	call for details	067036	Solenoid Valve, 1" Skinner 2-Stg. 230V
5	call for details	R11495-21	Pipe, TBE, 1 x 5
6	call for details	025045	Elbow, Conduit, 1/2 x 90, M/F
7	call for details	N16771-21	Pipe, TBE, 1/2 x 1-1/8
8	call for details	025030	Elbow, Conduit, 1/2 x 90 F/F
9	call for details	N16289-20	1/2" UNY Explosion-proof Conduit Union

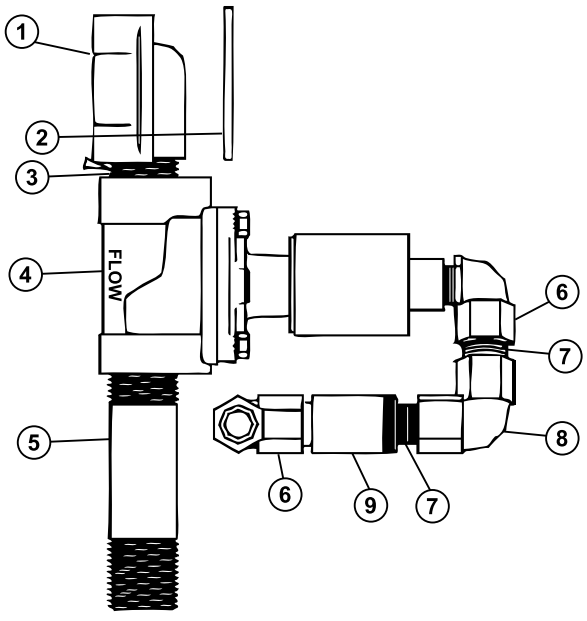

All names, numbers, symbols and descriptions are used for reference purposes only. It is not implied that any part listed is the product of these manufacturers.

Entire contents copyright © 2022 SVI International, Inc.

Bearing Plate and Switch Assembly - Model 71

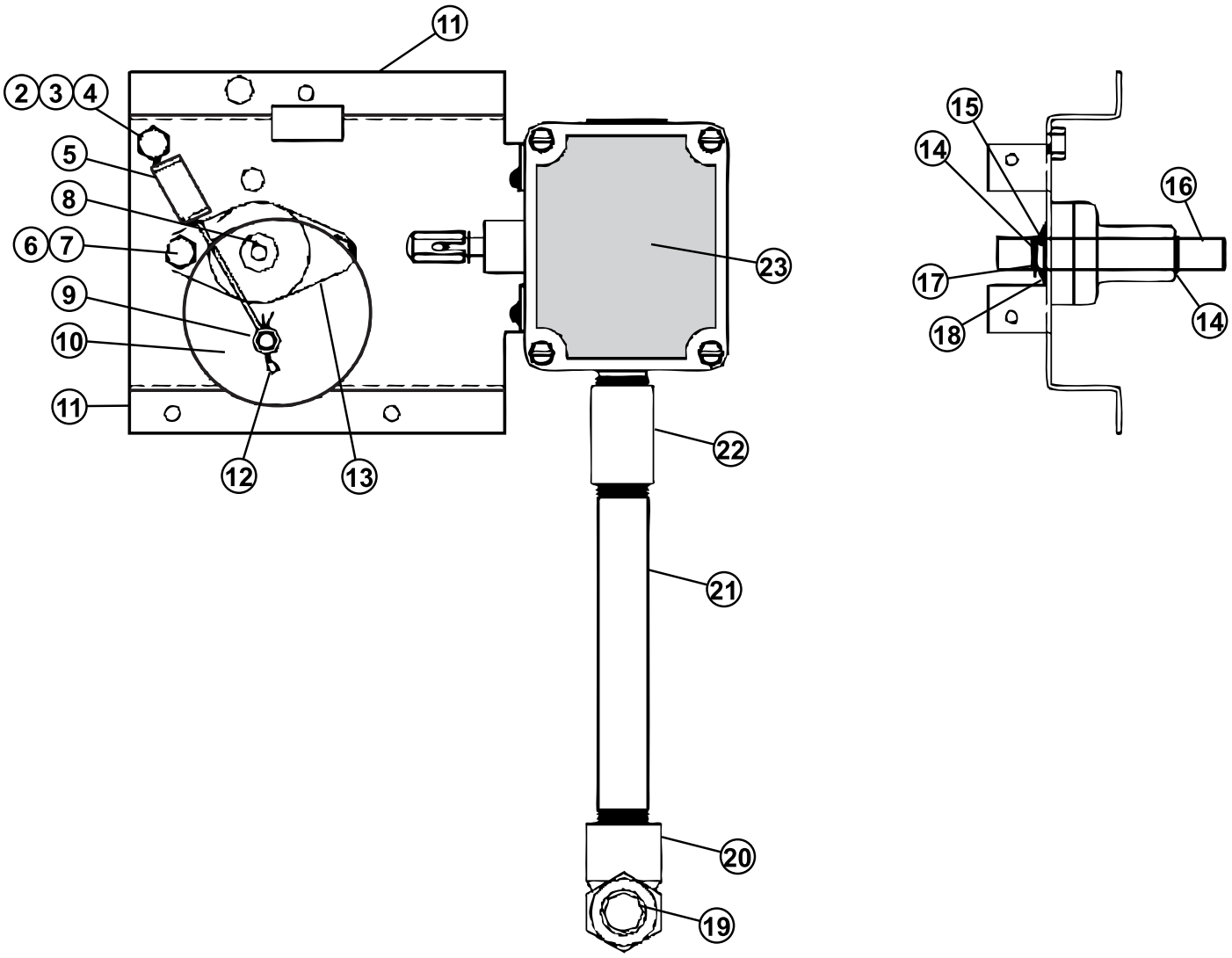

Item	SVI Part #	OEM #	Description
1	call for details	049910	Plate-Bearing Assy. (incl. items 2-18)
2	BP-4214-63	Q12068-06	Nut, 5/16 x 18
3	call for details	C08914	Nylon Bushing
4	call for details	K03782	Screw, 5/16-18 x 1-3/4 HHC
5	call for details	029358	Handle Spring
6	BP-4214-64	K73278-28	Lockwasher, 5/16
7	call for details	K51194	Screw, 5/16-18 x 5/8 HHC
8	call for details	042657	Roll Pin, 1/8 x 1-3/8
9	call for details	C08913	Nylon Bushing
10	call for details	046054	Cam
11	call for details	015920	Switch Bracket
12	call for details	K02125	Cotter Pin

Item	SVI Part #	OEM #	Description
13	call for details	003184	Bearing
14	call for details	K76238-20	Retaining Ring
15	call for details	011958	Bearing, Nyliner
16	call for details	054447	Shaft, Start
17	call for details	067109	Brass Washer
18	call for details	068951	Spring Washer
19	call for details	N16289-20	1/2" UNY Explosion-proof Conduit Union
20	call for details	025045	Elbow, Conduit, 1/2 x 90 M/F
21	call for details	021401	Conduit, 1/2 x 7
22	call for details	021986	Coupling
23	call for details	064440	Switch Housing/Wire Assembly
24	call for details	*064466	Switch (subpart within 064440 Assy.)

All names, numbers, symbols and descriptions are used for reference purposes only. It is not implied that any part listed is the product of these manufacturers.

Entire contents copyright © 2022 SVI International, Inc.

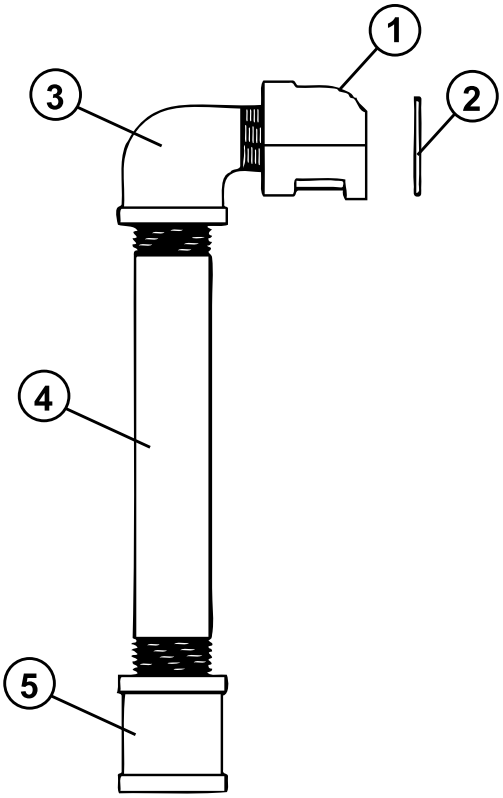

Model 71 Discharge Assembly Standard - Bottom

Item	SVI Part #	OEM #	Description
1	BP-4215-17	003650	Flange, 1" T
2	**BP-4210-20**	**M05618B001**	**Gasket, Inlet/Outlet**
3	call for details	K02321-20	Elbow, Street
4	call for details	R11495-94	Pipe, TBE 1 x 9
5	call for details	021955	Coupling, 1" Black Mall.

Model 71 Discharge Assembly Rear, Optional

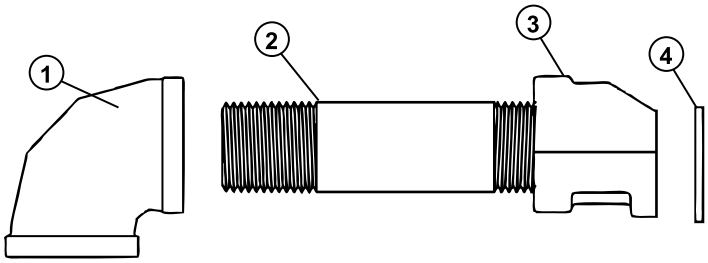

Item	SVI Part #	OEM #	Description
1	call for details	024895	Elbow, 1 x 90
2	call for details	R11495-21	Pipe, TBE 1 x 5
3	BP-4215-17	003560	Elbow, Flanged, 1"
4	BP-4210-20	M05618B001	Gasket, Inlet/Outlet

Model 71 - Optional Accessories - Parts

Item	SVI Part #	OEM #	Description
1	No longer available	F37325	Motor, 50/60 Cycle, 230 VAC
2	call for details	032118	Filter Kit
3	call for details	032689	Pulser Kit, 10:1 Ratio, Gallon/Liter
4	call for details	038573	Nozzle, Automatic, Unleaded, M. Carder
5	call for details	038574	Nozzle, Automatic, Leaded, M. Carder
6	call for details	089700	Mounting Pedestal
7	call for details	089702	Mounting Pedestal, Stainless Steel
8	call for details	015764	Mounting Bracket for Tank Mounted Register
9	call for details	041812	Panel, Sides/Back, Stainless Steel
10	call for details	041813	Door, Front, Stainless Steel
11	call for details	041814	Cover, Top, Stainless Steel
12	call for details	041815	Base, Stainless Steel

All names, numbers, symbols and descriptions are used for reference purposes only. It is not implied that any part listed is the product of these manufacturers.

Entire contents copyright © 2022 SVI International, Inc.

Quart Stroke Pump
Model 124

* Parts included in Repair Kit for Models 124 & 424 **BP-4218-91** (OEM Ref # 032891)

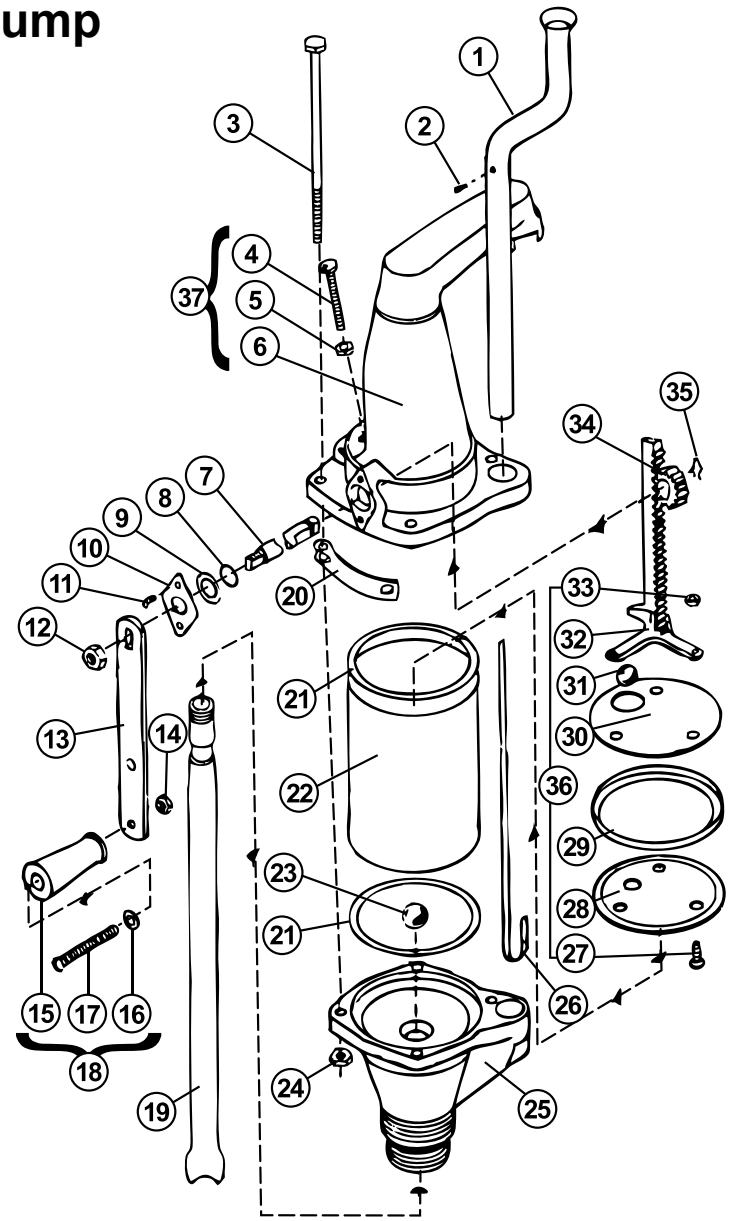

Item	SVI Part #	OEM #	Qty	Description
1	call for details	066280	1	Swing Tube
2	call for details	053650	1	Self-Tapping Screw
3	call for details	051340	4	Tie Rod
4	call for details	052390	1	Adjusting Screw
5	call for details	038740	1	Hex Jam Nut
6	call for details	003250	1	Pump Body
7	call for details	055840	1	Shaft
8*	BP-4218-93	Q10067 04	1	O-Ring
9*	BP-4218-95	054145	1	Seal (install with lip toward pump)
10	call for details	022825	1	Seal Cover
11	call for details	Q11270 50	2	Machine Screw
12	call for details	039115	1	Hex Nut
13	BP-4214-61	023200	1	Crank
14	call for details	038725	1	Nut
15	call for details	032920	1	Knob
16	BP-4214-14B	068605	1	Steel Washer
17	call for details	Q11560 200	1	Round Head Screw
18	call for details	033010	1	Knob Assembly (incl. items 14–17)
19	call for details	064897	1	Telescoping Suction Assembly

Item	SVI Part #	OEM #	Qty	Description
20	call for details	010720	1	Lock Bar
21*	BP-4218-92	026875	2	Gasket
22	call for details	023305	1	Cylinder
23	call for details	011170	1	3/4" Steel Ball (Check Valve)
24	F-HN-0250-20	038860	4	Hex Nut
25	call for details	003105	1	Pump Base
26	call for details	058030	1	Swing Return Spring
27	call for details	Q11560 55	3	Round Head Machine Screw
28	call for details	048760	1	Piston Retainer
29*	BP-4218-96	068245	1	Piston Washer
30	call for details	046870	1	Piston Plate
31	call for details	011200	1	5/8" Steel Ball (Piston Valve)
32	BP-4215-02	048160	1	Rack
33	call for details	039040	3	Hex Nut
34	BP-4214-60	043630	1	Pinion
35*	BP-4218-94	049360	1	Retaining Ring
36	call for details	045730	1	Piston & Rack Assy. (incl. items 27–33)
37	call for details	012735		Pump Body Assembly (incl. items 4–6)
38	call for details	068891	4	Lock Washer (not pictured)

All names, numbers, symbols and descriptions are used for reference purposes only. It is not implied that any part listed is the product of these manufacturers.

Entire contents copyright © 2022 SVI International, Inc.

300 Series Repair Kit

BP-4217-03
(OEM 032886)

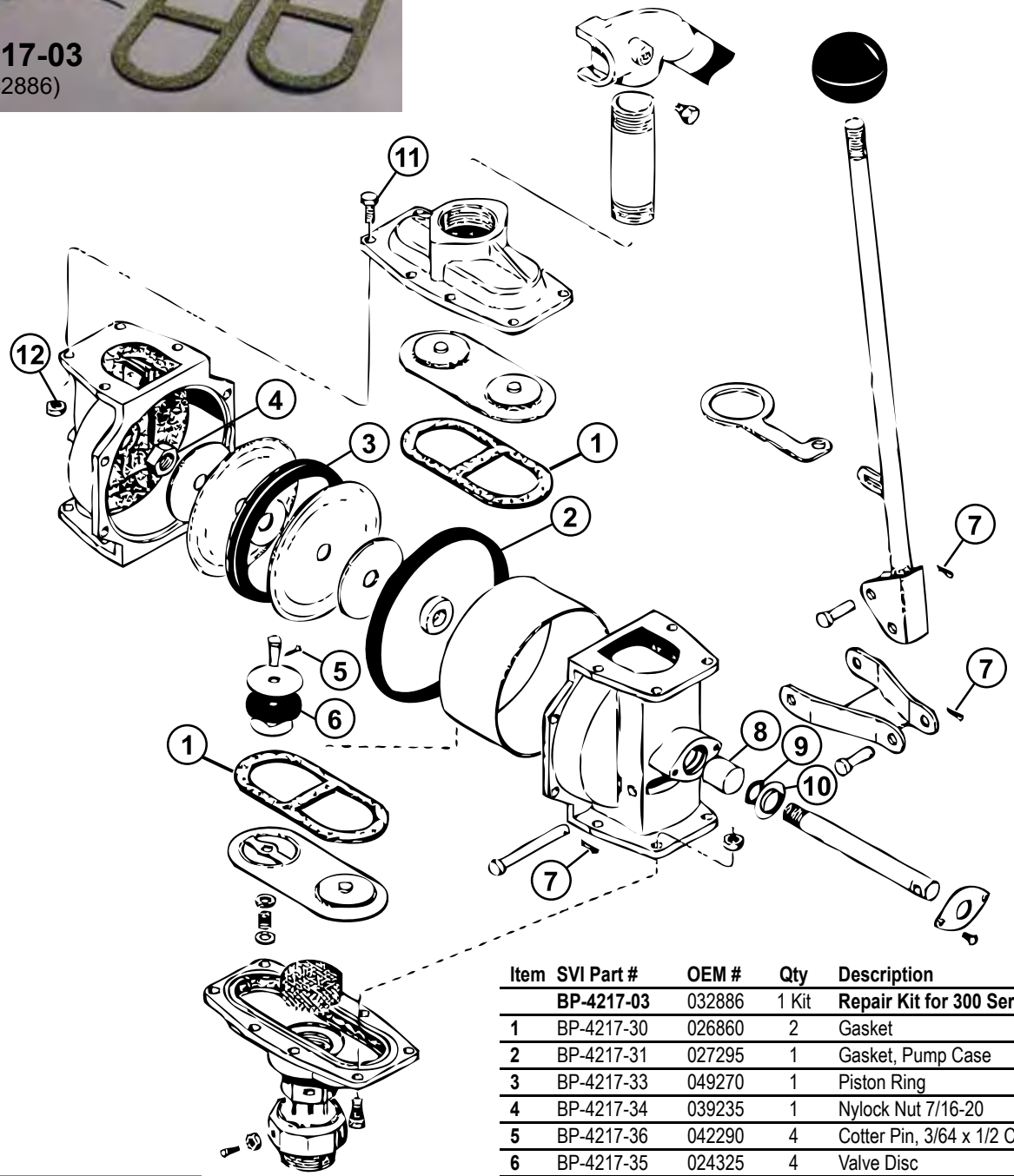

Item	SVI Part #	OEM #	Qty	Description
	BP-4217-03	032886	1 Kit	**Repair Kit for 300 Series**
1	BP-4217-30	026860	2	Gasket
2	BP-4217-31	027295	1	Gasket, Pump Case
3	BP-4217-33	049270	1	Piston Ring
4	BP-4217-34	039235	1	Nylock Nut 7/16-20
5	BP-4217-36	042290	4	Cotter Pin, 3/64 x 1/2 Chisel Pt
6	BP-4217-35	024325	4	Valve Disc
7	BP-4217-32	042310	3	Cotter Pin, 3/32 x 1/2 Hammer
8	BP-4217-17	034675	1	Liner Bearing
9	BP-4217-18	049195	1	O-Ring, 5/8 x 7/8
10	BP-4217-02	054160	1	Shaft Seal
11	F-HC-0250-20-0750	051835	3	Screw, 1/4-20 x 3/4
12	F-HN-0250-20	038860	3	Nut, 1/4-20 Hex

*Slimline 390 Pump

See 1800 Series Pumps for part numbers.
Slimline 390 has same internal parts, with different housing.

All names, numbers, symbols and descriptions are used for reference purposes only. It is not implied that any part listed is the product of these manufacturers.

Entire contents copyright © 2022 SVI International, Inc.

600 Series General Assembly

*Parts included in Repair Kit OEM #032934 for Series 620

BP-4210-03 Repair Kit

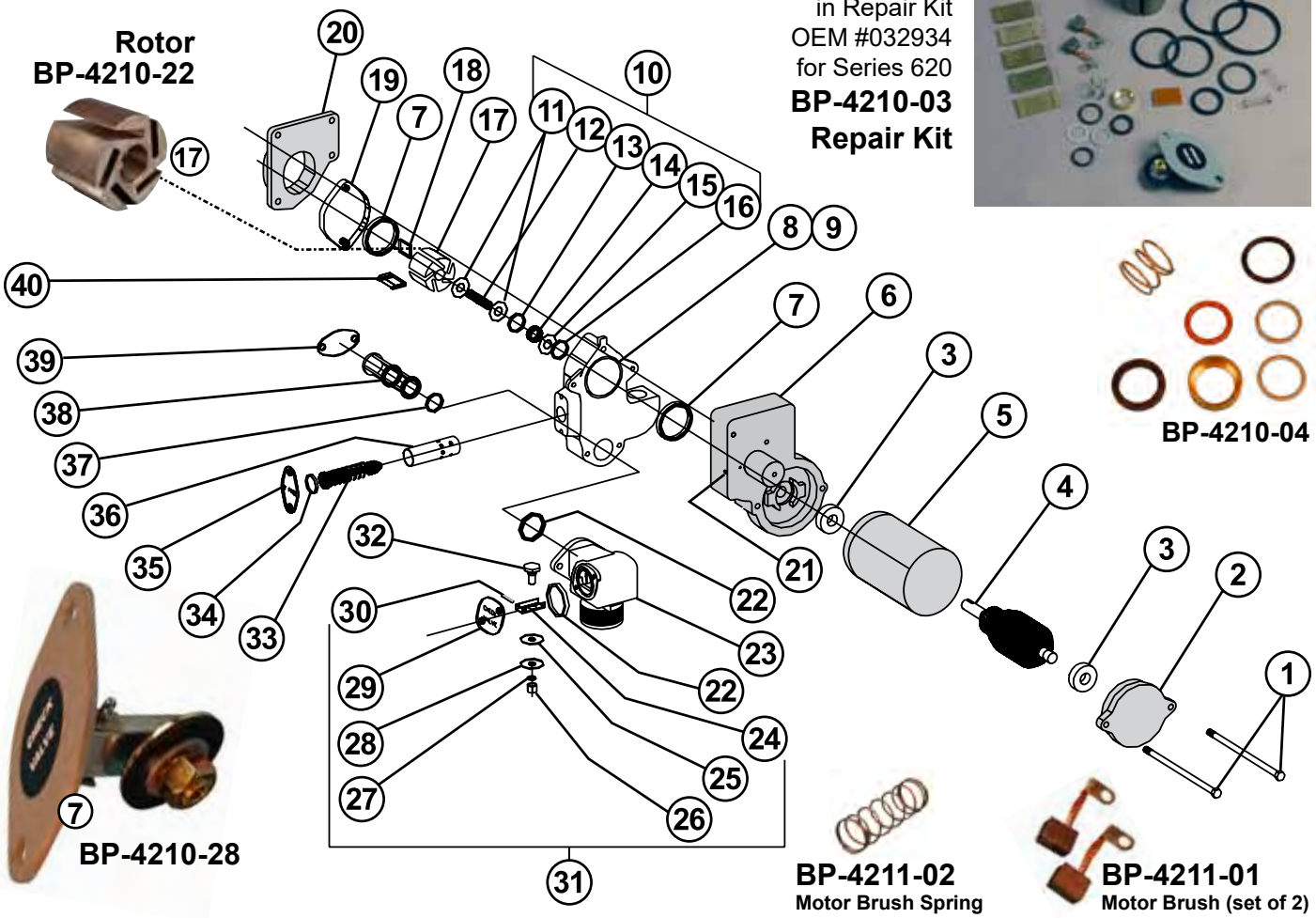

Item	SVI Part #	OEM #	Description
1	call for details	012905	Hex Bolt, 5/16-18 x 6-1/2
2	call for details	003814	End Cap
3	call for details	011869	Bearing
4	call for details	010907	Armature 12 VDC
	call for details	010908	Armature 24 VDC
5	call for details	037405	Field Assembly
6	call for details	003813	Motor Housing
7*	BP-4210-27	049004	Square Cut Ring
8	BP-4210-100	003210	Pump Block
9	call for details	052976	Ground Screw (not shown)
10*	**BP-4210-04**	054026	**Seal Kit** (incl. items 11–16)
11*	BP-4210-32	067210	Washer
12*	BP-4210-05	057955	Seal Spring
13*	BP-4210-33	048941	O-Ring
14*	BP-4210-34	049510	Rotating Sealing Ring
15*	BP-4210-35	048820	Floating Seal Ring
16*	BP-4210-06	048971	O-Ring
17*	BP-4210-22	051475	Rotor
18*	BP-4210-21	031285	Key
19	BP-4210-102	003490	Pump Cover
20	call for details	003819	Switch Cap
21	call for details	053170	Set Screw, 1/4-20 x 1/2" (Note: covered with silicone to prevent water entry)
22*	BP-4210-26	049003	Square Cut Ring

Item	SVI Part #	OEM #	Description
23	BP-4210-101	003065	Pump Base
24*	call for details	029155	Valve Guide
25*	call for details	068680	Washer
26*	call for details	038980	Hex Jam Nut
27*	call for details	068650	Washer
28*	call for details	024356	Valve Disk
29*	call for details	022271	Check Valve Cover Assembly
30*	call for details	042370	Cotter Pin
31*	**BP-4210-28**	066655	Check Valve Assembly (incl. items 24–30)
32	call for details	062620	Valve Stem
33	call for details	062338	Bypass Stem Assembly
34*	BP-4210-24	049001	Square Ring
35	BP-4210-103	022315	By-Pass Cover
36	BP-4210-104	065725	Tube, By-Pass Valve
37*	BP-4210-25	049002	Square Ring
38	BP-4210-11	063266	Strainer, 30 Mesh
39	BP-4210-103	022900	Strainer Cover
40*	**BP-4210-08**	067030	**Vane**
--	**BP-4210-08-5**	067030-5	**Vanes (5-Pack)**
41	call for details	067466	Shim Washer (not pictured)
*	BP-4211-01	015846	Brush, 600 Series
*	BP-4211-02	057867	Spring, 600 Series
--	**BP-4210-03**	032934	**Series 620 Repair Kit**

All names, numbers, symbols and descriptions are used for reference purposes only. It is not implied that any part listed is the product of these manufacturers.

Entire contents copyright © 2022 SVI International, Inc.

600 Series Pump and Motor Assembly

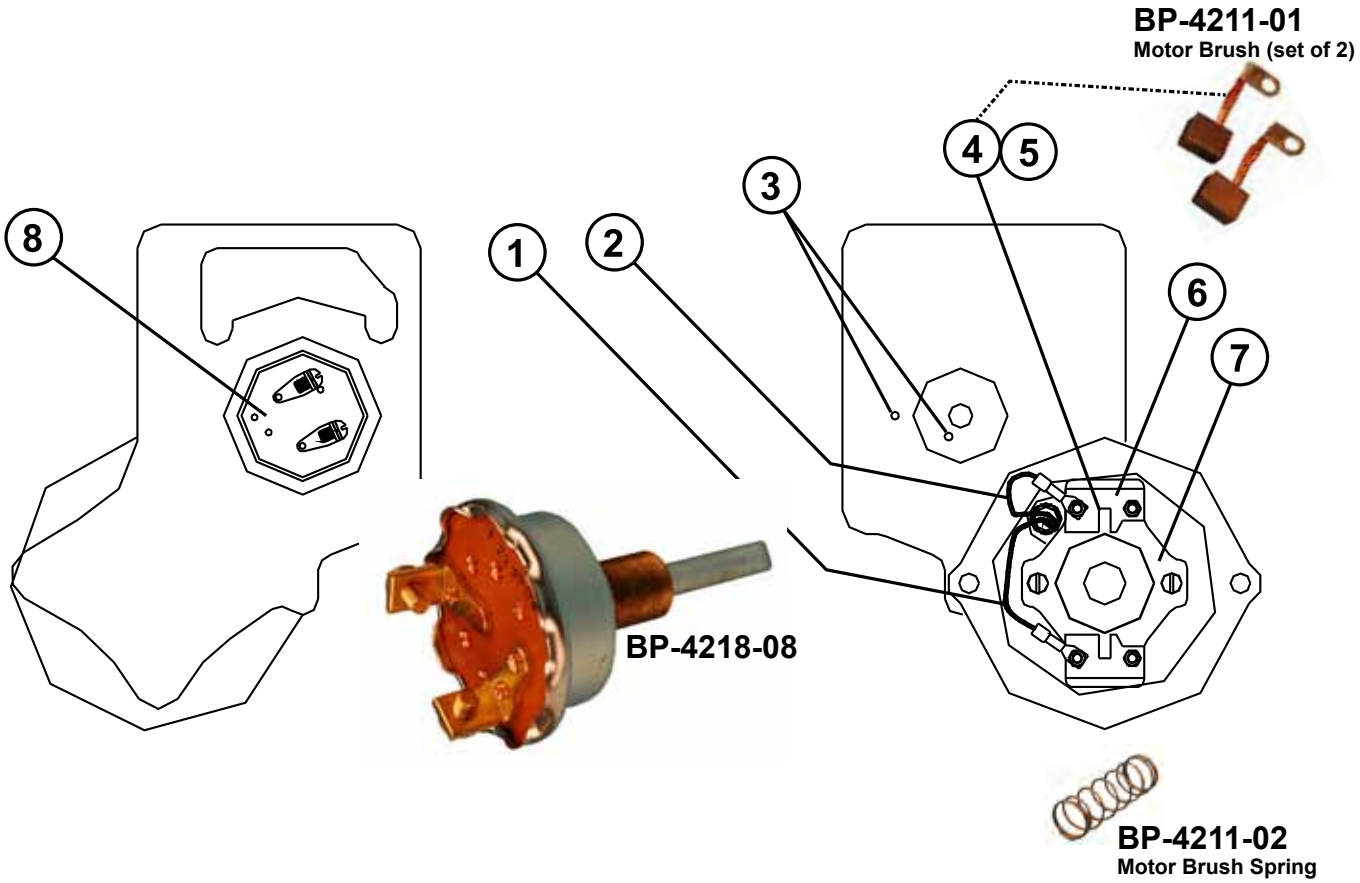

Item	SVI Part #	OEM #	Description
1	call for details	014161	Lead Assembly (+)
	call for details	014160	Lead Assembly (-) (not shown)
2	call for details	014162	Lead Assembly
3	BP-4210-115	042580	Drive Lock Pin (2 required)
4	BP-4211-01	015846	Brush (set of two)

Item	SVI Part #	OEM #	Description
5	BP-4211-02	057867	Spring (2 required)
6	call for details	015848	Brush Retainer
7	call for details	015845	Brush Holder
8	BP-4218-08	033759	Switch, On/Off

All names, numbers, symbols and descriptions are used for reference purposes only. It is not implied that any part listed is the product of these manufacturers.

Entire contents copyright © 2022 SVI International, Inc.

600 Series General Assembly - Exterior

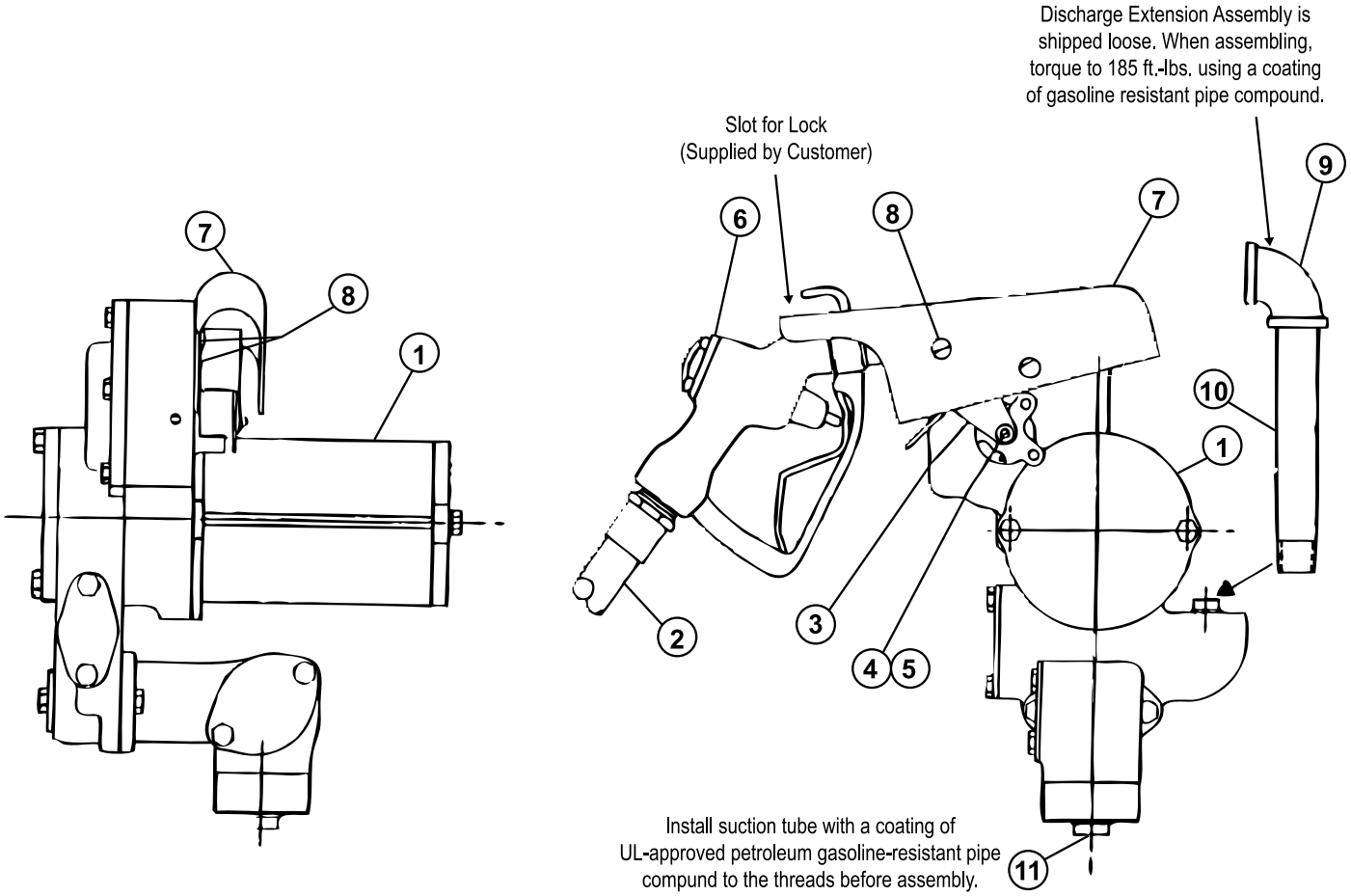

Item	SVI Part #	OEM #	Description
1	call for details		Pump & Motor Assembly 12VDC
	call for details		Pump & Motor Assembly 24VDC
2	call for details	030430	Hose, 1" x 12'
3	BP-4218-09	064307	Switch Lever Assembly
4	call for details	052765	RHMS, #8-32 x 5/16
5	call for details	C01171	Lockwasher #8
6	call for details	038509	Nozzle, 1" NPT, Leaded
	call for details	038469	Nozzle, 1" NPT, Unleaded
7	BP-4213-01	003807	Nozzle Boot
8	call for details	053903	Fl. Hd. Machine Screw, 1/4-20 x 1/2"
9	call for details		1" Discharge Units
	call for details	024925	Elbow, 3/4" x 1" x 90 reduc.
	call for details		1" Discharge Units with Vacuum Breaker
	call for details	064796	Tee, 1" Optional (not shown)
	call for details	017270	Bushing, 3/4" x 1" Reduc., Opt. (not shown)
	call for details	017286	Hex Bushing, 3/4" x 1/8", Opt. (not shown)
	BP-4211-23	066570	Vacuum Breaker, Opt., (not shown)

Item	SVI Part #	OEM #	Description
10	BP-4210-106	044089	Pipe Nipple, 3/4" x 6-7/8"
11	BP-4215-53	064895	Suction Tube, 1" NPT
OPTIONS (not shown)			
	call for details	035606	Meter, Model 3460-4J, US Gas (customer installed)
	call for details	033147	Meter, Model 3460-4J, US Diesel (customer installed)
	call for details	035607	Meter, Model 3460-4J, Liter Gas (customer installed)
	call for details	033142	Meter, Model 3460-4J, Liter Diesel (customer installed)
	call for details	033063	Meter Repair Kit
	call for details	038519	Automatic nozzle, std. flow, unleaded
	call for details	038520	Automatic nozzle, std. flow, leaded

All names, numbers, symbols and descriptions are used for reference purposes only. It is not implied that any part listed is the product of these manufacturers.

Entire contents copyright © 2022 SVI International, Inc.

1200 Series - Rotary Register Hand Pump

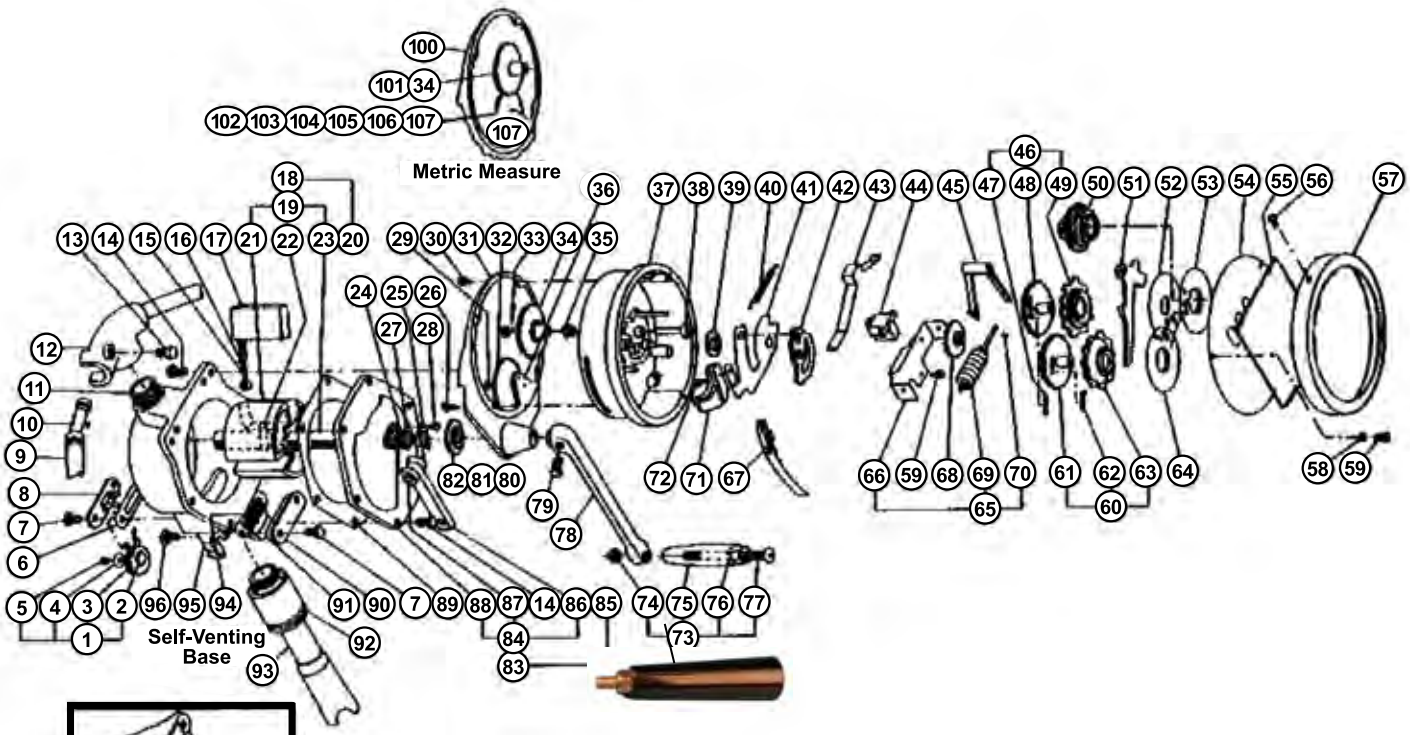

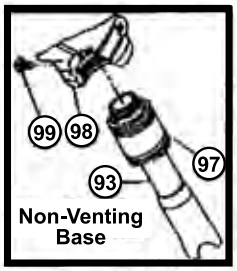

Item	SVI Part #	OEM #	Description
1	BP-4214-04	066670	Check Valve Assembly (incl. 2–5)
2	BP-4214-04D	012760	Check Valve Body
3	BP-4214-04C	024341	Valve Disc
4	BP-4214-04B	067315	Washer
5	BP-4214-04A	052990	Screw
6	BP-4214-02	026995	Check Valve Gasket
7	BP-4214-21	051880	Screw
8	BP-4214-31	022376	Check Valve Cover
9	call for details	030460	Hose
10	BP-4214-13	000785	Nozzle, Plastic
	call for details	038455	Nozzle, Auto-Shut Off (Opt.)
	BP-4214-12	000784	Nozzle, Plastic, Unleaded (Opt.)
11	BP-4214-32	038035	Pipe Nipple
12	BP-4214-33	003880	Hose Drain Valve Body
13	BP-4211-23	066570	Vacuum Breaker
14	BP-4214-24	051895	Screw
15	BP-4214-08	042865	Guide Pin
16	BP-4214-06	058105	Spring
17	BP-4214-07	067015	Vane
18	call for details	055497	Shaft Rotor Assy., 1200RT (incl. 20–22)
19	call for details	055495	Shaft Rotor Assy., 1200 (incl. 21–23)
20	call for details	055361	Pump Shaft, 1200RT
21	BP-4214-34	003830	Rotor

Item	SVI Part #	OEM #	Description
22	BP-4214-35	043240	Spirol Pin
23	BP-4214-36	054460	Pump Shaft, 1200
24	BP-4214-03	048955	O-Ring
25	BP-4214-37	022841	Seal Cover
26	call for details	051790	Screw
27	BP-4217-02	054160	Shaft Seal
28	BP-4214-38	052975	Screw
29	call for details	049406	Retaining Ring
30	call for details	052316	Screw
31	call for details	003037	Register Adapter, Gal.
32	call for details	028182	Idler Gear, Gal.
33	BP-4217-36	042290	Cotter Pin, Gal. or Ltr.
34	call for details	027656	Cluster Gear, Gal or Ltr.
	call for details	028453	Cluster Gear, Full Ltr.
35	BP-4210-40	014095	Bearing and Seal
36	call for details	055242	Shaft, Gal. or Ltr.
37	call for details	022662	Register Cover, Gal. or Ltr.
	call for details	030836	Register Cover, Full Ltr.
38	call for details	055692	Shaft and Gear, Gal. or Ltr.
	call for details	055268	Shaft and Gear, Full Ltr.
39	call for details	012085	Reset Lever Bearing
40	BP-4212-14	057895	Reset Lever Spring
41	call for details	033821	Reset Lever

(Parts List continues on following page)

All names, numbers, symbols and descriptions are used for reference purposes only. It is not implied that any part listed is the product of these manufacturers.

Entire contents copyright © 2022 SVI International, Inc.

1200 Series - Rotary Register Hand Pump

Item	SVI Part #	OEM #	Description
42	BP-4215-25	054325	Reset Sector
43	BP-4210-99	057580	Detent Spring
44	call for details	048805	Detent Spring Retainer
45	BP-4212-46	042055	Overthrow Stop Pawl
46	BP-4212-20	068993	Center Wheel Assembly (incl. 47–49)
47	BP-4212-26	042040	C.W. Reset Pawl
48	BP-4212-27	027600	C.W. Reset Gear
49	BP-4212-28	027580	C.W. Count Gear
50	BP-4212-22	068995	R.H. Wheel
51	BP-4218-06	063220	Overthrow Stop
52	BP-4212-45	024220	C.W. Number Disc. Gal/Ltr
53	BP-4212-44	024310	R.H. W. Number Disc. Gal./Ltr.
	call for details	024315	R.H. W. Number Disc. Full Ltr.
54	BP-4212-34	035394	Dial Face, Gal.
	call for details	035380	Dial Face, Ltr.
	call for details	035381	Dial Face, Full Ltr.
55	BP-4214-11	028780	Dial Glass
56	call for details	053605	Self-Tapping Screw
57	BP-4212-40	012250	Bezel
58	BP-4212-33	067780	Fiber Washer
59	call for details	052840	Screw
60	BP-4212-21	068994	L.H. Wheel Assembly (incl. 61–63)
61	BP-4212-23	028245	L.H. W. Count Gear
62	BP-4212-24	042070	L.H. W. Reset Pawl
63	BP-4212-25	028225	L.H. W. Count Gear
64	BP-4212-43	024280	L.H. W. Number Disc.
65	BP-4218-01	065305	Totalizer Assembly, Gal/Ltr (incl. 66, 69–70)
	call for details	065309	Totalizer Assembly, Full Ltr (incl. 66, 69–70)
66	call for details	015775	Totalizer Bracket
67	BP-4212-30	056425	Reset Lever Shoe
68	BP-4215-24	028615	Totalizer Drive Gear
69	call for details	039866	Odometer, Gal/Ltr
	call for details	039867	Odometer, Full Ltr.
70	call for details	049375	Retaining Ring
71	BP-4212-29	029410	Lever Handle
72	call for details	053900	Self-Tapping Screw
73	BP-4214-14	033040	Crank Handle Assembly (incl. 74–77)
74	call for details	038725	Nut
75	See BP-4214-14	032935	*See Crank Handle Assembly*

Item	SVI Part #	OEM #	Description
76	call for details	068605	Washer
77	call for details	052525	Screw
78	BP-4214-20	003530	Crank
79	BP-4218-03	051820	Screw
80	call for details	027852	Drive Gear, US, RT
81	call for details	027851	Drive Gear, IMP, RT
82	call for details	043450	Drive Gear, Ltr/Full Ltr, RT
83	call for details	022766	Pump Cover Assembly, RT
84	call for details	022765	Pump Cover Assembly, 1200
85	call for details	010737	Lock Arm, RT
86	BP-4214-23	010750	Lock Arm, 1200
87	BP-4214-25	049585	Rivet
88	BP-4214-22	003480	Pump Cover
89	BP-4214-09	026830	Pump Cover Gasket
	BP-4214-10	049011	O-Ring
	(Note: Gasket 026830 was replaced with O-Ring 049011. All pumps with serial numbers higher than 1237594 should use the O-Ring).		
90	BP-4214-27	022915	Strainer Cover
91	BP-4214-05	027355	Gasket
92	call for details	045520	Pipe Nipple
93	BP-4215-53	064895	Telescopic Suction, Plastic
	BP-4214-40	064841	Telescopic Suction, Alum.
94	BP-4214-28	063280	Strainer
95	call for details	003405	Pump Case, 1200, 1200RT, 1200RTU, 1235, 1223
96	call for details	053335	Set Screw
97	BP-4214-39	044935	Pipe Nipple, 1230U, 1230RU, 1235U, 1235RU
98	BP-4214-29	003410	Pump Case, 1200U, 1200RU
99	BP-4214-30	053245	Set Screw, 1200U, 1200RU
100	call for details	003042	Register Adapter, Ltr/Full Ltr
101	call for details	043210	Pin, Full Ltr.
102	BP-4214-77	011787	Bearing, Full Ltr.
103	call for details	028452	Idler Gear, Full Ltr.
104	BP-4212-32	049390	E-Ring, Full Ltr.
105	call for details	055277	Shaft, Full Ltr.
106	call for details	068490	Washer, SS, Full Ltr.
107	call for details	028183	Idler Gear, Ltr.
108	call for details	003406	Pump Case, 1230-7 (not shown)

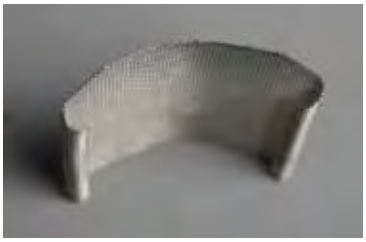

BP-4214-28
(Ref # 063280)
Strainer

All names, numbers, symbols and descriptions are used for reference purposes only. It is not implied that any part listed is the product of these manufacturers.

Entire contents copyright © 2022 SVI International, Inc.

1200 Series - Rotary Counter Hand Pump

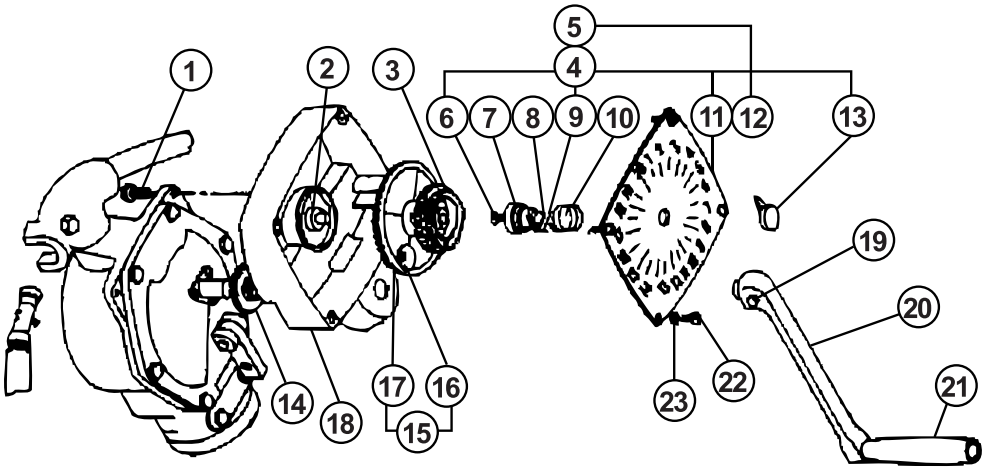

BP-4214-20
(ref 003530)
Crank

BP-4214-14
(ref 033040)
Crank Handle Assembly

Item	SVI Part #	OEM #	Description
1	F-HC-0312-18-0750	051895	Screw
2	call for details	068635	Washer
3	call for details	027805	Counter Drive Gear
4	call for details	023890	Dial Assy., US, IMP Non-Totalizer (incl. 6–11, 14)
5	call for details	023905	Dial Assy., Ltr., Non-Totalizer (incl. 6–10, 12–14)
6	BP-4214-19	052735	Screw
7	BP-4214-18	047395	Pointer Hub
8	BP-4214-17	058120	Zero Stop Spring
9	BP-4214-16	043420	Zero Stop Pin
10	BP-4214-15	057475	Clutch Spring
11	call for details	025555	Dial Face, Non-Totalizer
12	call for details	025720	Dial Face, Liter Non-Totalizer

Item	SVI Part #	OEM #	Description
13	call for details	047380	Pointer
14	call for details	043450	Drive Pinion
15	call for details	024760	Drive Gear Assembly (incl. 16–17)
16	call for details	031165	Planetary Gear, Idler
17	call for details	027833	Drive Gear
18	call for details	021820	Counter Housing
19	BP-4214-24	051895	Screw
20	BP-4214-20	003530	Crank
21	BP-4214-14	033040	Crank Handle Assembly
22	call for details	052840	Screw
23	call for details	067765	Fiber Washer

1200 Series - Discharge Spout and Positive Shut-Off Valve

Discharge Spout

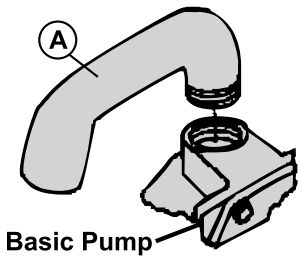

Positive Shut-Off Valve

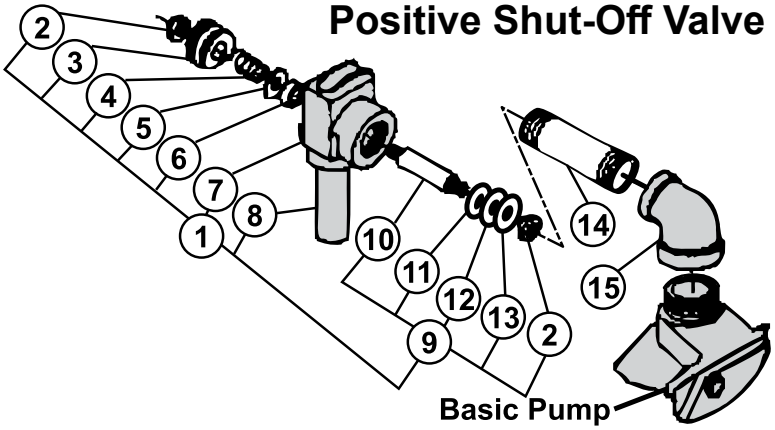

Item	SVI Part #	OEM #	Description
A	call for details	003855	Spout
1	call for details	025870	Nozzle Assembly (incl. 2–13)
2	call for details	038875	Lock Nut
3	call for details	032905	Knob
4	call for details	057190	Spring
5	call for details	067285	Washer
6	call for details	023230	U-Cup
7	call for details	003215	Body

Item	SVI Part #	OEM #	Description
8	call for details	057145	Spout
9	call for details	062260	Stem Assembly (incl. 2, 10–13)
10	call for details	062215	Stem
11	call for details	067270	Washer
12	call for details	067540	Rubber Disc
13	call for details	068530	Washer
14	call for details	044080	Pipe Nipple
15	call for details	024925	Pipe Reducing Elbow

All names, numbers, symbols and descriptions are used for reference purposes only. It is not implied that any part listed is the product of these manufacturers.

Entire contents copyright © 2022 SVI International, Inc.

1200 Series Drain Tray Assembly & Barrel Adapter, Models 1223, 1243

Item	SVI Part #	OEM #	Description
1	call for details	044725	Pipe
2	call for details	021955	Pipe Coupling
3	call for details	044740	Pipe
4	call for details		Drain Tray Assembly, 1243 (obsolete)
5	call for details	034615	Lid, 1243
6	call for details	051610	Screen
7	call for details	039475	Push On Nut
8	call for details		Tray (obsolete)
9	call for details	044080	Pipe Nipple
10	call for details	049945	Rivet
11	call for details	053320	Set Screw
12	call for details	003020	Barrel Adapter, 1243
13	call for details	003450	Barrel Adapter, 1223

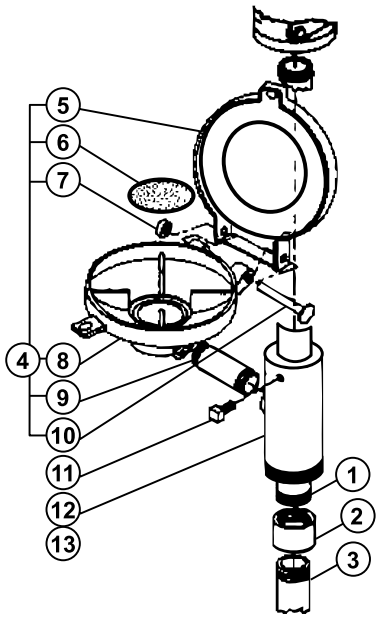

1200 Series Filters, Models 1230F, 1230RTF

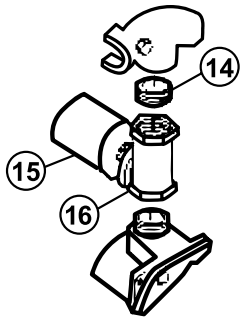

Item	SVI Part #	OEM #	Description
14	call for details	026005	Filter
	call for details	017840	Filter Cap (if not using filter)
15	call for details	003044	Filter Adapter
16	BP-4214-32	038035	Pipe Nipple

1200RT Rotary Hand Pump with Unleaded Nozzle

OEM #032852

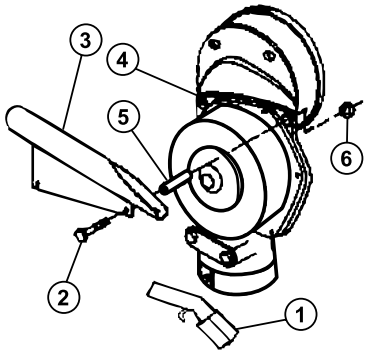

Item	SVI Part #	OEM #	Description
1	BP-4214-12	000784	Unleaded Nozzle
2	call for details	051971	Screw, 5/16" x 18 x 4-1/4" HHC
3	call for details	013649	Nozzle Boot Assembly
4	BP-4214-24	051895	Screw, 5/16" x 18 x 3/4" HHC
5	call for details	056788	Spacer
6	call for details	038605	Nut, 5/16"-18 Hex Keps

1200 Series - Optional Equipment

SVI Part #	OEM #	Description
call for details	038455	Automatic Shut-Off Nozzle (Diesel only)
call for details	032852	Unleaded Nozzle Conversion Kit
call for details	032829	Standard Pump to Counter Model Conversion Kit, Gallon
call for details	032827	Standard Pump to Counter Model Conversion Kit, Liter

All names, numbers, symbols and descriptions are used for reference purposes only. It is not implied that any part listed is the product of these manufacturers.

Entire contents copyright © 2022 SVI International, Inc.

1200 Series Rotary Pumps - Repair Kit

SVI # **BP-4214-01** • OEM # 032885

Item	SVI Part #	OEM #	Description
KIT	**BP-4214-01**	**032885**	**Repair Kit for 1200 Series**
1	BP-4214-04	066670	Check Valve Assembly
A	BP-4214-04A	052990	Screw
B	BP-4214-04B	067315	Washer
C	BP-4214-04C	024341	Valve Disc
D	BP-4214-04D	012760	Check Valve Body
2	BP-4214-02	026995	Check Valve Gasket
3	BP-4214-05	027355	Gasket Strainer Cover
4	BP-4214-09	026830	Gasket (see note)
5	BP-4214-10	049011	O-Ring (not shown)
6	call for details	C04033	Screw, 10-32 x 5/16 Pan Hd.
7	BP-4217-02	054160	Shaft Seal
8	BP-4214-03	048955	O-Ring, 11/16 x 7/8 Buna-N
9	BP-4214-07	067015	Vane, 1230
10	BP-4214-06	058105	Spring-Vane
11	BP-4214-08	042865	Guide Pin

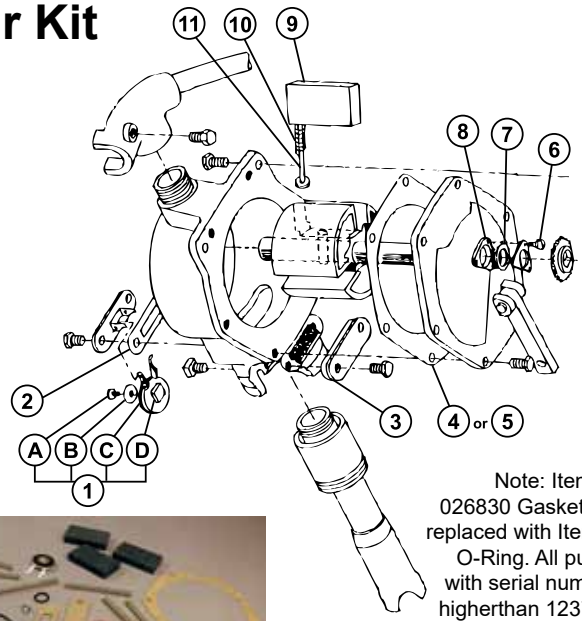

Note: Item #4, 026830 Gasket was replaced with Item #5 O-Ring. All pumps with serial numbers higherthan 1237594 should use the O-Ring.

Repair Kit for Models 1520A / 1720A / Tokheim 786 / 787

	SVI Part #	OEM #	Description
	BP-4217-05	**032694**	**Repair Kit** for 15020A/1720A/786/787
	BP-4217-22	048252	Bearing
	BP-4217-23	048249	Packing
	BP-4217-24	048286	Retainer Spring
	BP-4217-25	048272	Diaphragm
	BP-4217-26	048288	Check Valve
	BP-4217-27	048289	Valve Gasket
	BP-4217-28	048243	O-Ring, Square Cut
	BP-4217-29	048244	Diaphragm Washer

1620 / 1720 / Tokheim 787 / 786 Diaphragm Pumps and 1420 / 1520 / 1520T / Tokheim 797 / 796 / 797-T Piston Pumps

(pictured on following page)

Item	SVI Part #	OEM #	Description
1	BP-4217-61	048911	Pump Body
2	BP-4217-23	048249	Packing
	call for details	040046	Packing, 1520T
3	BP-4217-22	048252	Bearing
4	BP-4217-51	048254	Bearing Plate
5	call for details	068155	1/4 Lockwasher
6	BP-4217-59	029398	Handle and Grip Assembly
7	BP-4217-53	034916	Connecting Link
8	call for details	042355	3/32 x 3/4 Lg. Cotter Pin
9	call for details	043020	Pin 1-15/32" long
10	call for details	048278	Valve Assembly
	call for details	066942	Valve Assembly, 1520T
11	BP-4217-27	048289	Valve Gasket
	call for details	054150	Small Valve Seal, 1520T
	call for details	054151	Large Valve Seal, 1520T
12	BP-4217-26	048288	Check Valve
	call for details	066941	Valve, 1520T
13	BP-4217-60	048247	Valve Plate
14	call for details	048285	Valve Spring
15	BP-4217-24	048286	Spring Retainer
16	call for details	048287	Push-On Ring
	call for details	049532	Push-On Ring, 1520T
17	BP-4217-52	048260	Suction Screen
	call for details	051616	Suction Screen, 1520T
18	BP-4215-22	026031	Inlet Fitting, 1" FNPT used w/bung adapter
	BP-4217-63	048280	Inlet Fitting, 1" FNPT x 2" MNPT w/vent hole
	call for details	048491	Inlet Fitting, 1" FNPT x 2" MNPT w/o vent hole
19	BP-4217-65	048296	1/4-20 x 7/8 Lg. Hex Hd. Thread Forming Screw
20	call for details	048253	Fire Screen
	call for details	051613	Fire Screen, 1520T
21	call for details	048297	Push-On Ring
	call for details	049531	Push-On Ring, 1520T
22	BP-4214-53	026116	Bung Adapter Assembly
23	BP-4214-30	053245	1/4-20 x 3/4 Lg. Sq. Hd. Cup Pt. Set Screw

(Part List continues on following page)

All names, numbers, symbols and descriptions are used for reference purposes only. It is not implied that any part listed is the product of these manufacturers.

Entire contents copyright © 2022 SVI International, Inc.

1620 / 1720 / Tokheim 786 / 787 Diaphragm Pumps and 1420 / 1520 / 1520T / Tokheim 797 / 796 / 797-T Piston Pumps

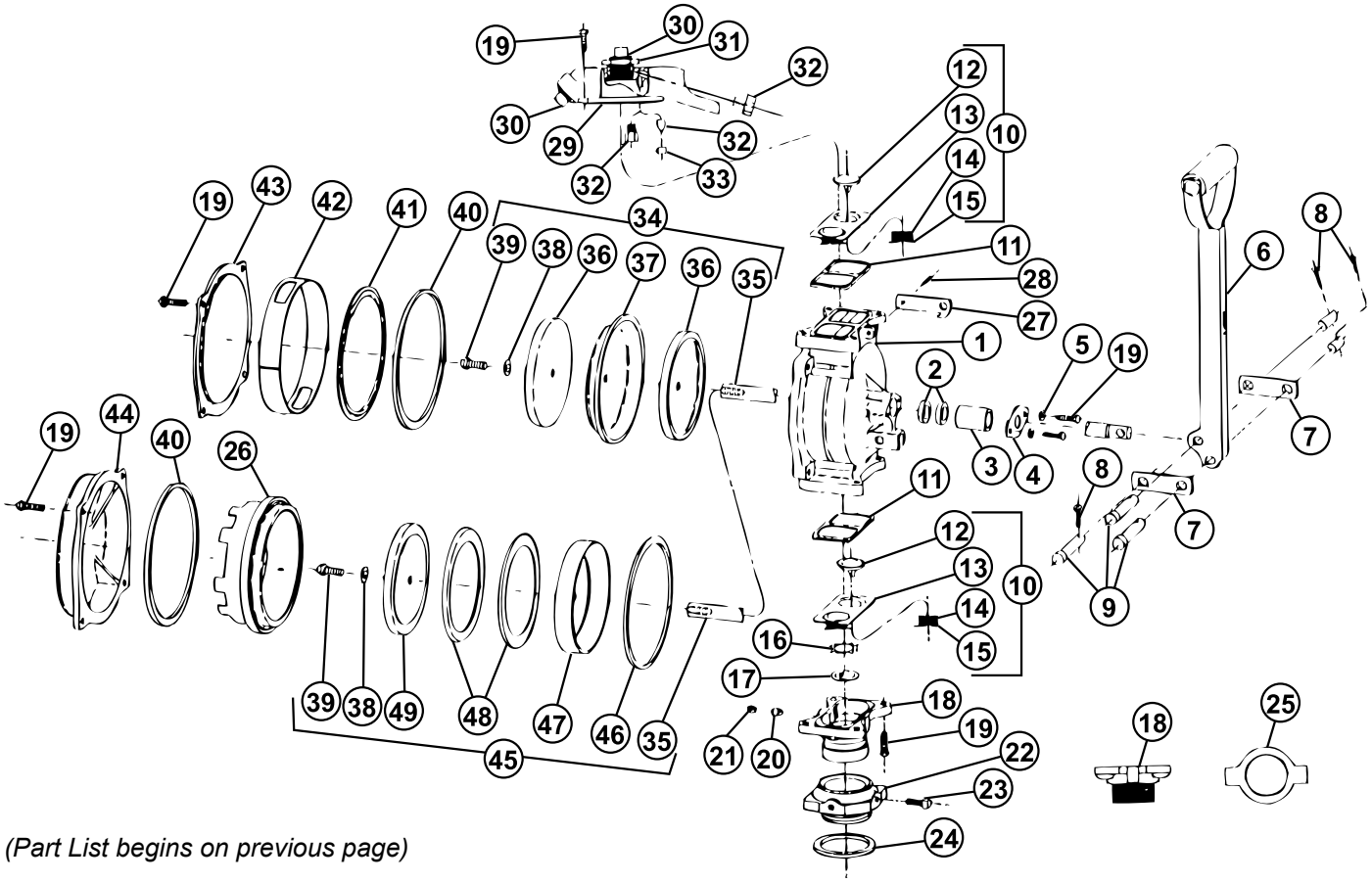

(Part List begins on previous page)

Item	SVI Part #	OEM #	Description
24	call for details	027367	Gasket (Bung Adapter)
25	BP-4217-71	039163	Locking Ring
26	call for details	003927	Piston Cylinder (piston pumps only)
27	BP-4217-55	020641	Clasp
28	call for details	043261	3/16 Dia. x 1/2 Lg. Roll Pin
29	call for details	026032	Fitting, 1" Vertical Outlet
	call for details	026056	Fitting, 1" Vertical Outlet, 1520T
	BP-4217-64	048267	Fitting, 3/4" Side Outlet
	(Outlet fittings also require items 32 and 33 to prevent leakage)		
30	call for details	047290	Pipe Plug, 3/4"
31	call for details	017278	Bushing - Hexagon, 1520T
32	call for details	048266	Vacuum Breaker (Production prior to 2/27/98)
	BP-4211-23	066570	Vacuum Breaker (Production 2/27/98 or later)
	call for details	066527	Vacuum Breaker, 1520T
33	call for details	048264	Retainer (except 1520T)
34	call for details	048273	Diaphragm Assembly
35	BP-4217-57	048270	Shaft
	call for details	055895	Shaft (piston pumps only)
36	BP-4217-56	048271	Diaphragm Retainer
37	BP-4217-25	048272	Diaphragm

Item	SVI Part #	OEM #	Description
38	call for details	068044	3/8 Lockwasher
	call for details	068936	3/8 Lockwasher
39	BP-4217-42	051981	3/8-24 x 3/4 Lg. Self-Locking Screw
	call for details	051977	3/8-24 x 7/8 Lg. Self-Locking Screw, 1520T
40	BP-4217-28	048243	Ring, Square Cut
	call for details	054086	Cover Seal, 1520T
41	BP-4217-29	048244	Diaphragm Washer
42	BP-4217-70	048246	Diaphragm Ring
43	BP-4217-62	048245	Cover
44	call for details	003506	Piston Cover
	call for details	023060	Piston Cover, 1520T
45	call for details	045701	Piston Assembly
	call for details	045702	Piston Assembly, 1520T
46	BP-4217-41	027368	Ring - Square Cut
	call for details	054092	Seal Ring Assembly, 1520T
47	call for details	045662	Piston Retainer
	call for details	045660	Piston Retainer, 1520T
48	BP-4217-44	045705	Piston Cup (piston pumps only)
49	call for details	045663	Piston Retainer
	call for details	045661	Piston Retainer, 1520T

All names, numbers, symbols and descriptions are used for reference purposes only. It is not implied that any part listed is the product of these manufacturers.

Entire contents copyright © 2022 SVI International, Inc.

Accessories for Diaphragm and Piston Pumps

SVI Part #	OEM #	Description
BP-4215-53	064895	Sliding Suction, Polyethlene
BP-4217-72	064841	Sliding Suction, Alum.
call for details	066110	Sliding Suction, Alum. 1520T
call for details	030550	5/8" x 8' Hose (Std.)
call for details	030530	5/8" x 8' (UL-approved)
BP-4214-13	000785	Nozzle (Regular, Manual)
BP-4214-12	000784	Nozzle (Unleaded, Manual)
call for details	038455	Nozzle (Regular, Automatic)
BP-4217-05	032694	Repair Kit - Diaphragm
BP-4214-50	**032695**	**Repair Kit - Piston**
BP-4214-51	032696	Repair Kit - Piston (1520T)
call for details	003855	Discharge Spout
call for details	003924	Pedestal Only (Casting)
call for details	049495	Bottle Filler Kit

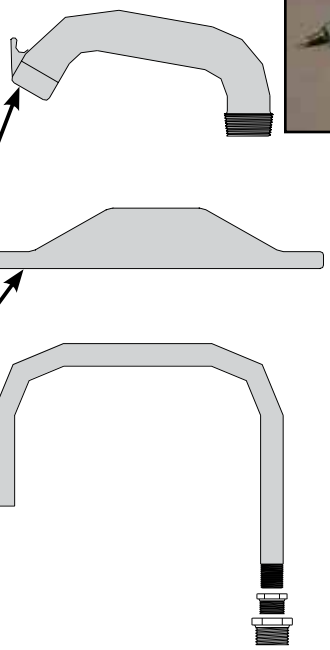

Meter-Register Conversion Kit for Diaphragm and Piston Pumps

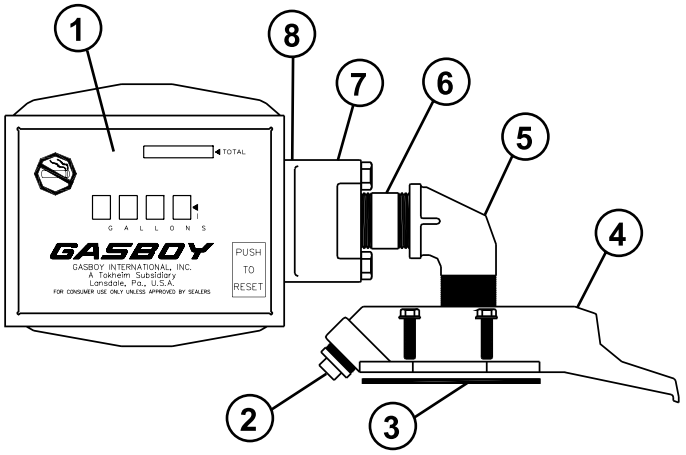

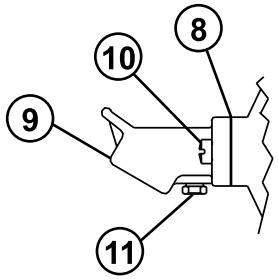

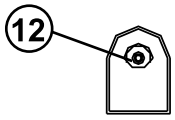

Item	SVI Part #	OEM #	Description
1	BP-4212-100	036341	Meter Reg, 4860P-40, US Gal. Gas & Dsl.
	call for details	036343	Meter Reg, 4860P-44, Liter Gas & Dsl.
	call for details	036345	Meter Reg, 4860P-52, Imperial Gas & Dsl.
2	call for details	047290	Plug Pipe, Sq. Hd.
3	BP-4217-27	048289	Valve Gasket
4	call for details	026032	Adapter-Spout
5	call for details	024941	Elbow, Street 1 x 90

Item	SVI Part #	OEM #	Description
6	BP-4214-32	038035	Pipe TBE, 1 x 1-1/2 Close Nip
7	call for details	003650	Flange
8	BP-4210-20	027055	Gasket, Inlet/Outlett
9	call for details	003606	Elbow, Flange, 3/4 Dsch, Vac. Breaker
10	call for details	052555	Screw, 3/8-16 x 7/8
11	BP-4211-23	066570	Vacuum Breaker Assembly
12	call for details	047279	Plug Pipe, Soc. Hd. 1/8

All names, numbers, symbols and descriptions are used for reference purposes only. It is not implied that any part listed is the product of these manufacturers.

Entire contents copyright © 2022 SVI International, Inc.

1700 Series - Repair Kit

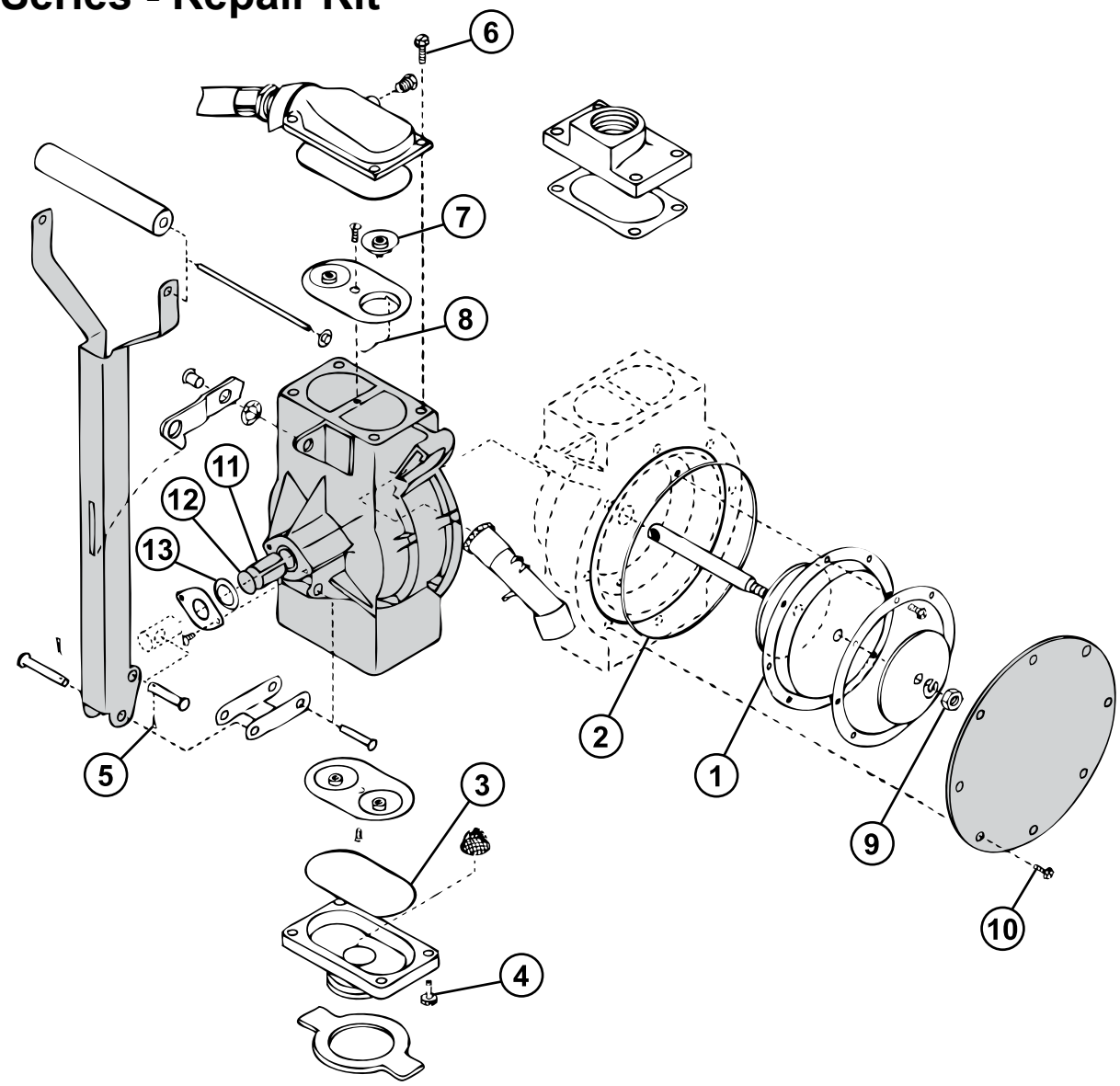

Item	SVI Part #	OEM #	Description
	BP-4217-10	032887	**Repair Kit 032887 for Series 1700**
1	BP-4217-01	024146	Diaphragm
2	BP-4217-13	049205	Ring, Square Cut, 6-1/4 x 6-7/16, Buna
3	BP-4217-14	049182	Ring, Square Cut, 2.99ID/099/151
4	BP-4217-21	053918	Screw, 1/4-20 x 1
5	BP-4217-19	042311	Cotter Pin, 3/32 x 1/2 Chisel
6	BP-4217-20	053917	Screw, 1/4-20 x 3/4

Item	SVI Part #	OEM #	Description
7	BP-4217-15	066626	Valve Assembly
8	BP-4217-16	048791	Retainer Spring
9	BP-4217-11	038920	Lock Nut, 5/16-18 Hex
10	BP-4217-12	053901	Hex Washer, 12-24 x 1/2
11	BP-4217-17	034675	Liner Bearing
12	BP-4217-18	049195	O-Ring, 5/8 x 7/8, Buna-N
13	BP-4217-02	054160	Shaft Seal

All names, numbers, symbols and descriptions are used for reference purposes only. It is not implied that any part listed is the product of these manufacturers.

Entire contents copyright © 2022 SVI International, Inc.

Models 25, 26 & 250
3460 Meter Register Assembly

METER REGISTER ASSEMBLIES

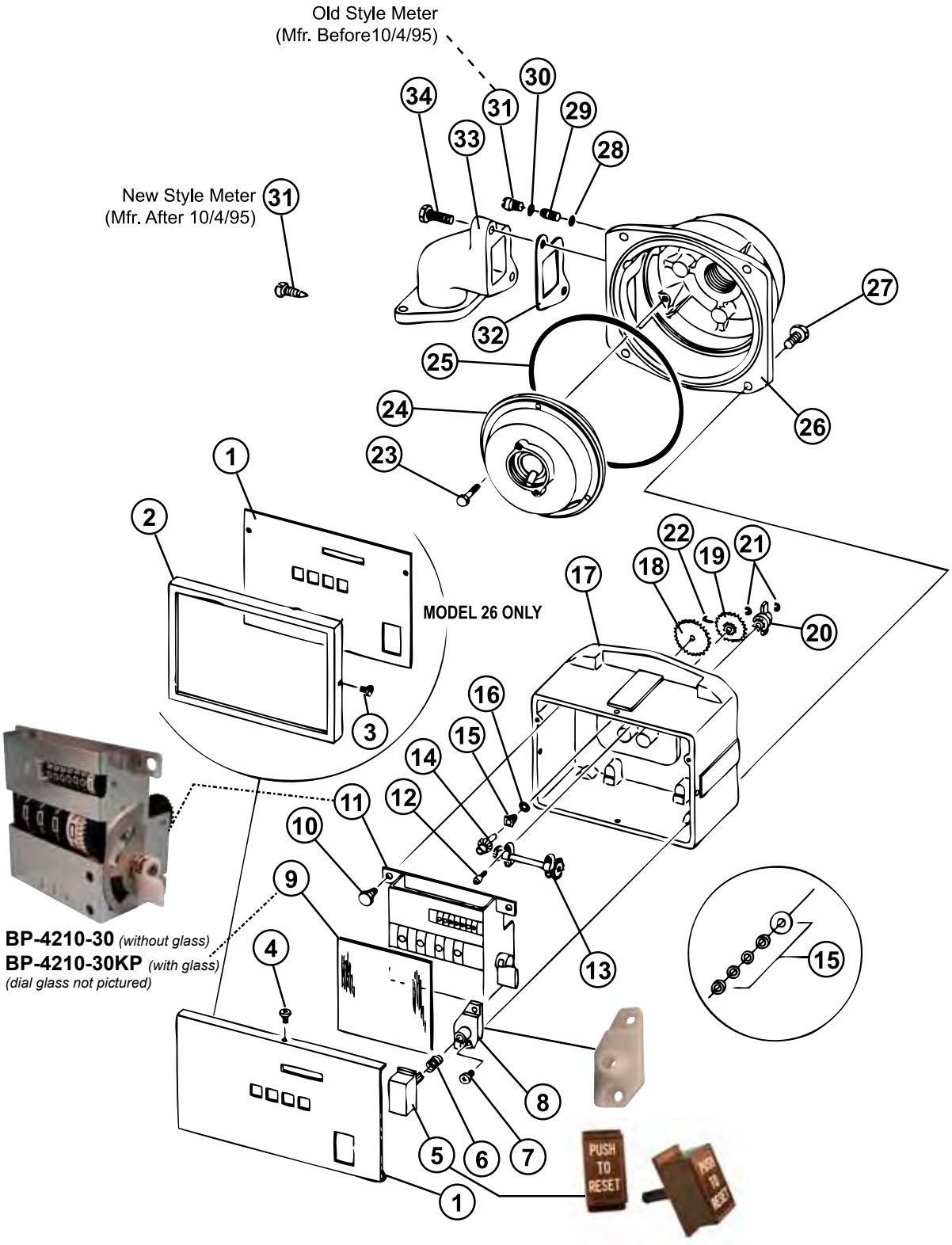

All names, numbers, symbols and descriptions are used for reference purposes only. It is not implied that any part listed is the product of these manufacturers.

Entire contents copyright © 2022 SVI International, Inc.

Models 25, 26 & 250
3460 Meter Register Assembly

Item	SVI Part #	OEM #	Description
1	call for details	035307	Dial Mask, US & Imperial, 25
	call for details	035311	Dial Mask, Liter Measure, 25
	BP-4212-06	035309	Dial Mask, US & Imperial, 26
	call for details	035313	Dial Mask, Liter Measure, 26
2	**BP-4212-04**	012236	Bezel, Model 26 only
3	call for details	052693	Tapping Screw, Model 26 only
4	BP-4212-10	053626	Phillips Head Screw, #6-32 x 3/8"
5	**BP-4212-18**	017269	Reset Button (For spring, also see item 6)
6	BP-4212-16	057985	Spring
7	BP-4212-07	053737	Screw, Taptite
8	BP-4212-17	011816	Bearing
9**	BP-4210-46	028736	Dial Glass
10	F-HC-0250-20-0500	051790	Cap Screw, 1/4-20 x 1/2"
11	**BP-4210-30KP**	**S00758**	**Register Assembly (w/ Glass)**
	BP-4210-30LS	S00766	Reg. Assy., Ext. Shaft/Pul (w/ Glass)
	BP-4210-30	048461	Register Assembly (no glass) (pictured)
12	BP-4212-10	053626	Phillips Head Screw, #6-32 x 3/8"
13	BP-4212-09	054513	Drive Shaft Assembly
14**	BP-4210-54	054512	Drive Shaft Assembly
15**	BP-4210-40	014095	Bearing & Seal Stuffing Box (old style)
	BP-4210-50	036995	Bearing & Seal Stuffing Box (new style)
	Note: New style stuffing box used on meters made after mid 1993.		
16**	BP-4210-48	048865	O-Ring
17	call for details	031019	Register Housing Assembly, Model 25
	call for details	031018	Register Housing Assembly, Model 26
	call for details	037219	Register Housing Assy., Model 25 w/ Pulser

** Part is included in Repair Kit **BP-4210-02** (OEM # 032892)

BP-4210-02 (OEM # 032892)
Repair Kit 20 Series

Item	SVI Part #	OEM #	Description
CHANGE GEARS - US GALS			
18	**BP-4219-10**	**028167**	**Drive Gear, 48T**
19	**BP-4219-11**	028174	Cluster Gear, 39T & 13T, Gas
	BP-4212-36	028168	Cluster Gear, 39T & 12T, Dsl
20	BP-4219-13	012498	Control Block, 12T
CHANGE GEARS - LITERS			
18	**BP-4219-14**	**028201**	**Drive Gear, 29T, Dsl**
	BP-4219-15	**028209**	**Drive Gear, 28T, Gas**
19	**BP-4219-16**	**028169**	**Cluster Gear, 39T & 29T**
20	**BP-4219-13**	**012498**	**Control Block, 12T**
CHANGE GEARS - IMPERIAL			
18	**BP-4219-10**	**028167**	**Drive Gear, 48T**
19	**BP-4219-11**	**028174**	**Cluster Gear, 39T & 13T**
20	**BP-4219-20**	**012500**	**Control Block, 10T**
21	**BP-4212-32**	**049390**	**E-Ring**
22	**BP-4210-47**	**031345**	**Spring Key**
23	**BP-4212-105**	**025851**	**Screw, Phenolic Chamber**
24	**BP-4219-03**	**019018**	**Measuring Chamber, C Size, Bronze**
	BP-4219-02	**019027**	**Measuring Chamber, C Size, Phenolic**
25**	**BP-4210-52**	**049063**	**O-Ring 6" ID**
26	**BP-4219-01**	**003253**	**Meter Housing**
27	**BP-4210-112**	**051895**	**Cap Screw, 5/16-18 x 3/4"**
28**	BP-4210-48	048865	O-Ring (old style meter mfr. before 10/4/95)
29	call for details	053080	Adj. Screw (old style meter mfr. before 10/4/95)
30**	BP-4210-49	048895	O-Ring
31	call for details	052195	Adj. Cap Screw (old style)
	BP-4212-109	053081	Adj. Cap Screw (new style)
32**	BP-4210-45	026814	Gasket
33	BP-4219-21	003561	Inlet Manifold
34	F-HC-0312-18-0875	051900	Cap Screw, 5/16-18 x 7/8"

All names, numbers, symbols and descriptions are used for reference purposes only. It is not implied that any part listed is the product of these manufacturers.

Entire contents copyright © 2022 SVI International, Inc.

1860 and 4860 Meter-Register

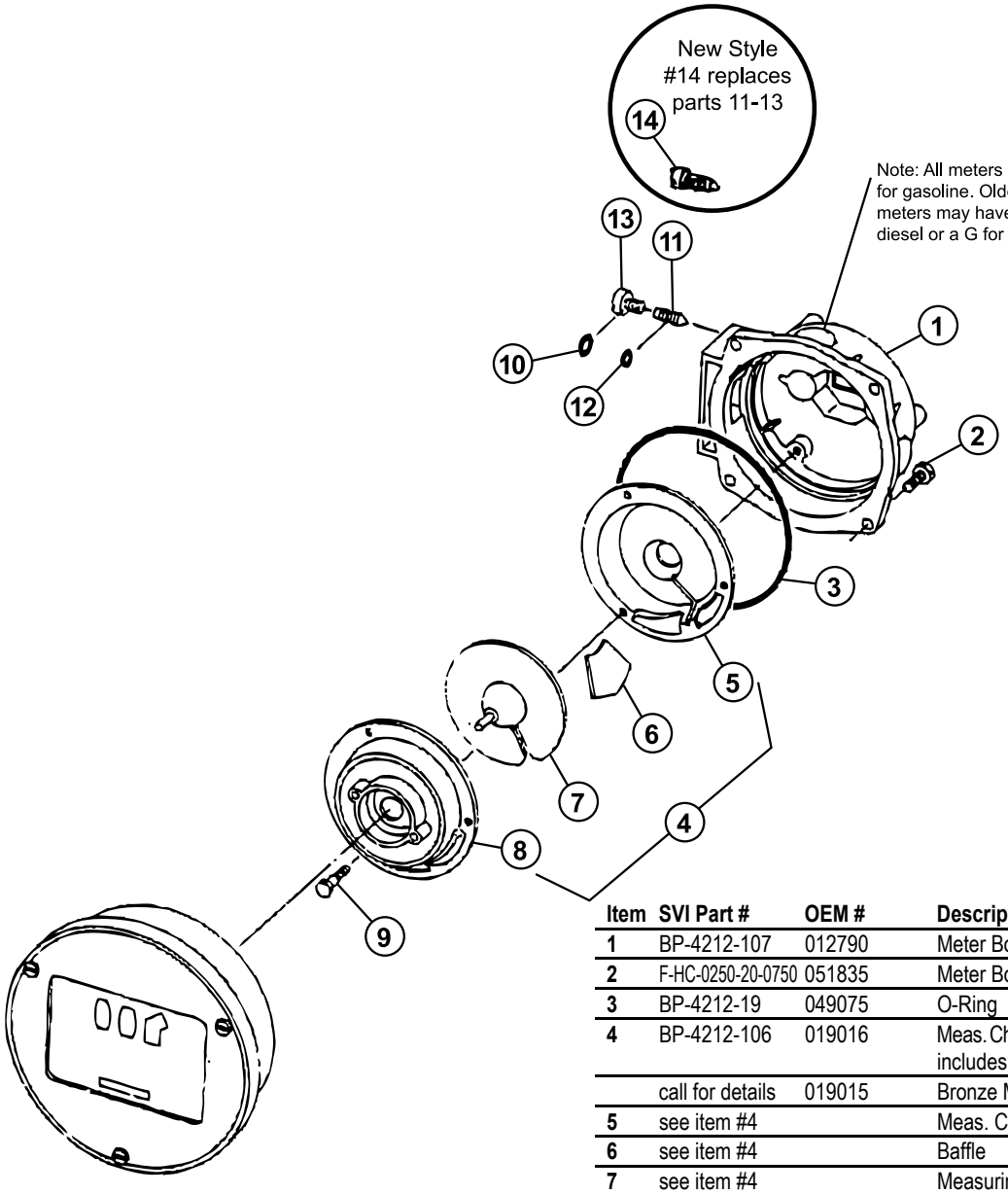

Item	SVI Part #	OEM #	Description
1	BP-4212-107	012790	Meter Body
2	F-HC-0250-20-0750	051835	Meter Body Screw
3	BP-4212-19	049075	O-Ring
4	BP-4212-106	019016	Meas. Chamber Assy. (sold as assy. only; includes items 5–8)
	call for details	019015	Bronze Meas. Chamber
5	see item #4		Meas. Chamber - Bottom
6	see item #4		Baffle
7	see item #4		Measuring Disc
8	see item #4		Meas. Chamber - Top
9	BP-4212-105	025851	Screw
10	BP-4210-49	048895	O-Ring
11	call for details	053080	Adjusting Screw (old style)
12	BP-4210-48	048865	O-Ring, Buna
	call for details	048866	O-Ring, Viton
13	call for details	052195	Adjusting Screw, Cap
14	BP-4212-109	053081	Adjusting Screw (new style; replaces 11-13)

Register Assemblies

3-Wheel Disc Register (Shown Above)

SVI Part #	OEM #	Description
call for details	035963	US Gallons
call for details	036293	Full Liter
call for details	048478	1/10 Liter

4-Wheel Push-Button Register (Not Shown)

SVI Part #	OEM #	Description
call for details	036400	US Gallons, 4860 Register Assembly
call for details	036404	Liter

All names, numbers, symbols and descriptions are used for reference purposes only. It is not implied that any part listed is the product of these manufacturers.

Entire contents copyright © 2022 SVI International, Inc.

1860 3-Wheel Meter Register
Models 60, 64, 70 Series, and 1820

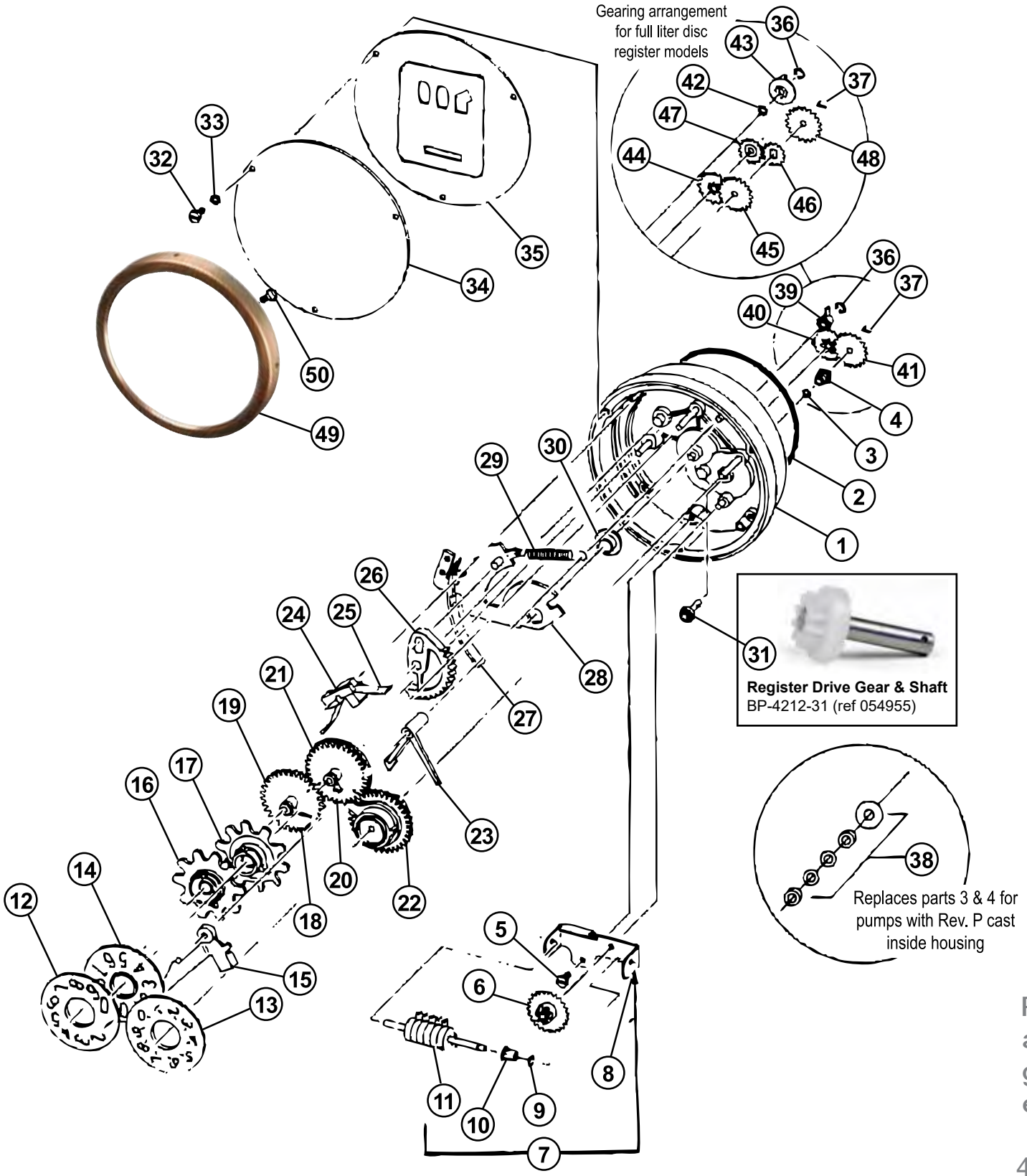

All names, numbers, symbols and descriptions are used for reference purposes only. It is not implied that any part listed is the product of these manufacturers.

Entire contents copyright © 2022 SVI International, Inc.

1860 3-Wheel Meter Register
Models 60, 64, 70 Series, and 1820

Item	SVI Part #	OEM #	Description
	BP-4212-02	032889	**Repair Kit** for 1860/3860 Meter (includes parts below marked with an *)
1	call for details	022675	Register Housing
2*	BP-4212-19	049075	O-Ring
3*	BP-4210-48	048865	O-Ring 5/32" ID
4*	BP-4210-40	014095	Bearing and Seal Assy. (Use only when Rev. K is cas inside of housing #1. If other Rev., see item 38)
5	call for details	052840	Screw
		Q11270 351	Screw
6	BP-4215-24	028615	Totalizer Drive Gear
7	BP-4218-01	065305	Totalizer Assembly (Items 8–11 not sold separately)
12*	BP-4212-43	024280	LH Number Disc
13*	BP-4212-44	024310	RH Number Disc
14*	BP-4212-45	024220	Center Number Disc
15	BP-4218-06	063220	Overthrow Stop Center & LH Wheels
16	BP-4212-25	028225	LH Count Wheel
	BP-4212-21	068994	LH Wheel Assy (Includes 16, 18, 19)
17	BP-4212-28	027580	Center Count Wheel
	BP-4212-20	068993	Center Wheel Assy. (Incl. 17, 20, 21)
18*	BP-4212-24	042070	LH Reset Pawl
19	BP-4212-23	028245	LH Reset Gear
20*	BP-4212-26	042040	Center Reset Pawl
21	BP-4212-27	027600	Center Reset Gear
22*	BP-4212-22	068995	Wheel and Clutch Assembly
23	BP-4212-46	042055	Overthrow Stop Pawl
24	call for details	048805	Detent Spring Retainer
25	BP-4210-99	057580	Detent Spring
26	BP-4215-25	054325	Reset Sector Gear
27	BP-4212-30	056425	Reset Lever Shoe
28	call for details	033822	Reset Lever
29	BP-4212-14	057895	Reset Lever Spring
30	call for details	012085	Reset Lever Bearing
31	BP-4212-31	054955	Register Drive Gear & Shaft
32	call for details	052840	Dial Mask Screw
		Q11270 351	Dial Mask Screw
33*	BP-4212-33	067780	Fiber Washer
34*	BP-4214-11	028780	Dial Glass
35	BP-4212-34	035394	Dial Mask US Gallons & Imperial Gallons
	call for details	035380	Dial Mask, Liter, Tenths
36*	BP-4212-32	049390	Retaining Ring
37*	BP-4210-47	031345	Drive Key
38*	BP-4210-50	036995	Bearing & Seal Assembly (Use only when Rev. P is cast inside of housing #1. If other Rev., see item 4)
49	BP-4212-40	012250	Bezel (70 Series)
50	call for details	053605	Bezel Screw (70 Series)
		Q11769 02	Bezel Screw (70 Series)

CHANGE GEARS - US GALLONS (New Style)			
39	BP-4212-15	012491	Control Block, 12T
	BP-4215-26	012490	Control Block, Bronze, 12T
40	BP-4212-35	028129	Cluster Gear, Gas, 32T-11T
41	BP-4212-37	028448	Drive Gear, Gas, 36T
CHANGE GEARS - US GALLONS (Old Style)			
39	BP-4212-15	012491	Control Block, 12T
	BP-4215-26	012490	Control Block, Bronze, 12T
40	call for details	027715	Cluster Gear, Gas, 33T-11T
	BP-4215-31	027655	Cluster Gear, Dsl, 34T-11T
41	BP-4212-37	028448	Drive Gear, Gas, 36T
	BP-4215-27	028450	Drive Gear, Dsl, 37T
CHANGE GEARS - IMPERIAL GALLONS			
39	BP-4212-15	012491	Control Block, 12T
	BP-4215-26	012490	Control Block, Bronze, 12T
40	call for details	027670	Cluster Gear, Gas, 34T-10T
	call for details	027685	Cluster Gear, Dsl, 35T-10T
41	call for details	028465	Drive Gear, Gas, 38T
	call for details	028480	Drive Gear, Dsl, 39T
CHANGE GEAR - LITERS, TENTHS (99.9)			
39	call for details	012505	Control Block, 26T
40	call for details	027705	Cluster Gear, Gas, 18T-11T
	call for details	027700	Cluster Gear, Dsl, 19T-11T, 1820S only
41	BP-4212-37	028448	Drive Gear, Gas, 36T
	call for details	028465	Drive Gear, Dsl, 38T
CHANGE GEARS - LITERS, FULL (999 LITERS)			
7	call for details	065309	Totalizer Assembly (all black wheels)
13	call for details	024315	RH Number Disc (Full Liter)
31	call for details	053318	Register Drive Gear & Shaft
35	call for details	035381	Dial Mask (Full Liter)
42	call for details	068454	Spacer Washer
43	BP-4212-15	012491	Control Block, 12T
	BP-4215-26	012490	Control Block, Bronze, 12T
44	BP-4212-35	028129	Cluster Gear, Gas, 32T-11T
	BP-4215-31	027655	Cluster Gear, Dsl, 34T-11T
45	call for details	028229	Gear, 38T
46	call for details	028230	Gear, 24T
47	call for details	028231	Cluster Gear, 14T-25T
48	call for details	028232	Drive Gear, Gas, 34T
	call for details	028228	Drive Gear, Dsl, 35T

All names, numbers, symbols and descriptions are used for reference purposes only. It is not implied that any part listed is the product of these manufacturers.

Entire contents copyright © 2022 SVI International, Inc.

4860 4-Wheel Meter Register (Models 67, 68, 72S and Series 1820R)

OLD STYLE
(Mfr. before May 10, 1995)

NEW STYLE
(Mfr. after May 10, 1995)

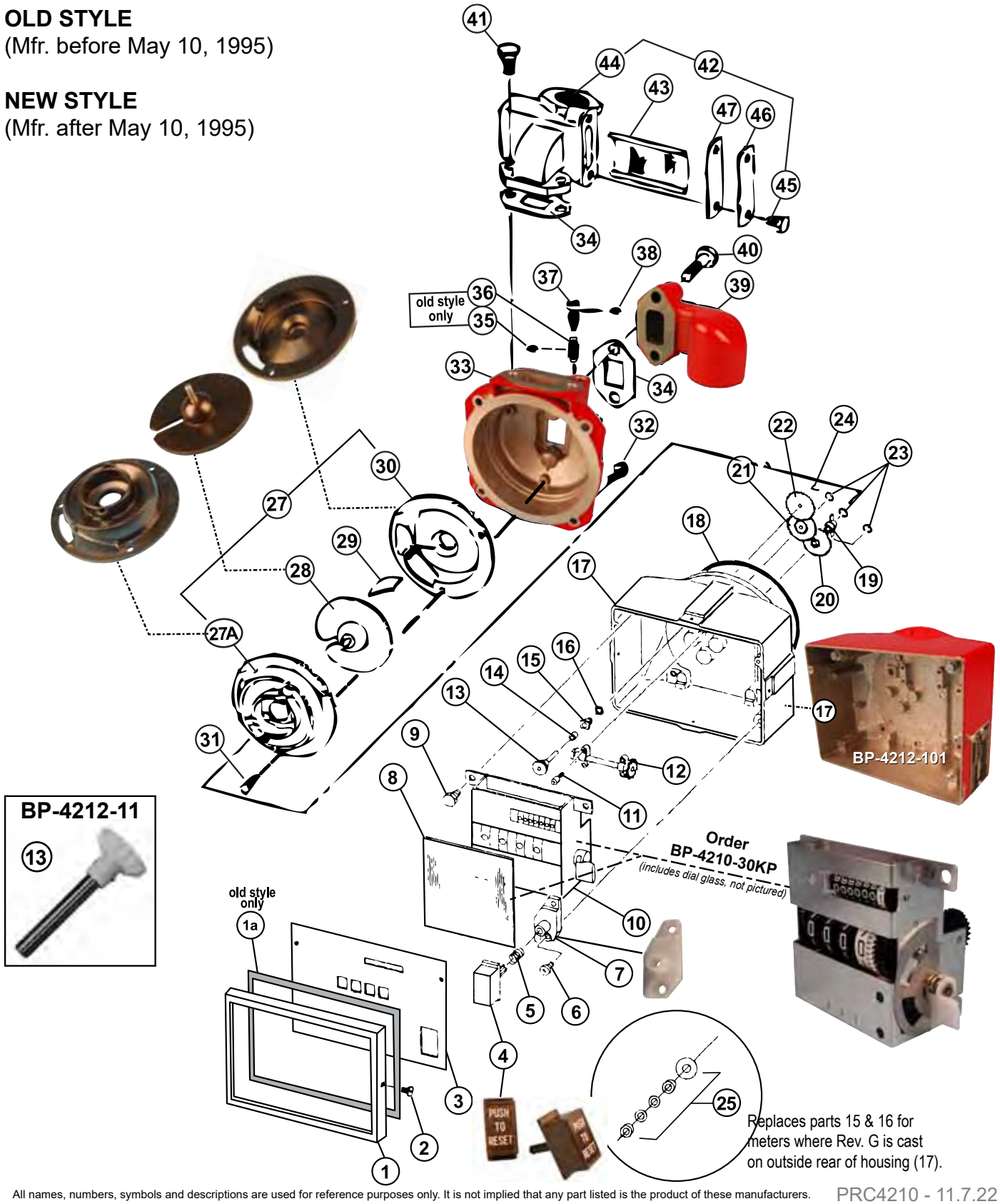

Replaces parts 15 & 16 for meters where Rev. G is cast on outside rear of housing (17).

All names, numbers, symbols and descriptions are used for reference purposes only. It is not implied that any part listed is the product of these manufacturers.

Entire contents copyright © 2022 SVI International, Inc.

4860 4-Wheel Meter Register (Models 67, 68, 72S and Series 1820R)

	BP-4212-100	036341	4860 Meter Register Assy., US Gallons

Item	SVI Part #	OEM #	Description
1	BP-4212-04	012236	Bezel
	call for details	012267	Bezel, 1820R
1a	call for details		(old style only)
2	call for details	052693	Bezel Screw
	BP-4212-05	053625	Bezel Screw
3	BP-4212-06	035309	Dial Mask
	call for details	035307	Dial Mask, 1820R
4	**BP-4212-18**	017269	Reset Button (For spring, also see item 5)
5	BP-4212-16	057985	Spring, setback
6	BP-4212-07	053737	Reset Bearing Screw
7	BP-4212-17	011816	Reset Bearing
8	BP-4210-46	028736	Dial Glass
9	BP-4217-12	053901	Register Screw
	BP-4212-08	K85736 55	Register Screw
10	**BP-4210-30KP**	S00758	Register Assembly (incl. glass)
	BP-4210-30LSRC	S00765	Register Assembly, Ext. Shaft (incl. glass)
11	BP-4212-10	053626	Drive Shaft Assembly Screw
12	BP-4212-09	054513	Drive Shaft Assembly
13	BP-4212-11	054522	Drive Shaft and Gear
14	BP-4212-12	056791	Spacer
15	BP-4210-40	014095	Bearing and Seal Assy. (Use if no letter is cast onto rear of housing #17. If Rev. G, see item 25)
16	BP-4210-48	048865	O-Ring
17	BP-4212-101	031020	Register Housing Assembly
	BP-4212-102	022667	Register Housing
	call for details	048426	Register Housing, 1820R
	call for details	048994	Register Housing (Model 71)
18	BP-4212-19	049075	O-Ring
23	BP-4212-32	049390	Retaining Ring - E
24	BP-4210-47	031345	Drive Key - Spring
25	BP-4210-50	036995	Bearing & Seal Assy. (Use only when Rev. G is cast onto rear of housing #17. If no Rev., see item 15)
26	BP-4212-106	019016	Measuring Chamber phenolic (standard, sold as assy. only., consists of 27-30)
	call for details	019015	Measuring Chamber, bronze (optional)
27	BP-4212-106-1		Measuring Chamber, Top
28	BP-4212-106-2		Measuring Disc
29	BP-4212-106-3		Baffle
30	BP-4212-106-4		Measuring Chamber, Bottom
31	BP-4212-105	025851	Screw, Phenolic Chamber
	call for details	052750	Screw, Bronze Chamber
32	BP-4212-108	K43625	Meter Body Screw
33	BP-4212-107	012790	Meter Body
34	BP-4210-20	M05618B001	Gasket
35	BP-4210-48	048865	O-Ring (old style only)
36	call for details	053080	Adjusting Screw (old style only)
37	BP-4212-109	053081	Adjusting Screw Cap (new style)
	call for details	052195	Adjusting Screw Cap (old style)
38	BP-4210-49	048895	O-Ring
39	BP-4212-110	003542	Discharge Flange, 3/4"
	BP-4215-17	003560	Discharge Flange, 1"
40	call for details	K01904	Discharge Flange Screw

Item	SVI Part #	OEM #	Description
41	call for details	051985	Inlet Flange Screw (new style)
	call for details	K01901	Inlet Flange Screw (old style)
42	call for details	063400	Inlet Flange & Strainer Assy., 1"
43	call for details	063295	Strainer
44	call for details	003305	Strainer Body, 1", 60°
45	call for details	Q10624 13	Strainer Cover Screw
46	BP-4214-27	022915	Strainer Cover
47	BP-4214-05	027355	Strainer Cover Gasket

Change Gears

Item	SVI Part #	OEM #	Description
US GALLONS (New Style) Gasoline or Diesel			
19	BP-4212-15	012491	Control Block, 12T
	BP-4215-26	012490	Control Block, Bronze, 12T
20	BP-4212-36	028168	Cluster Gear, 12T-39T
21	BP-4212-38	028172	Cluster Gear, Gas, 15T-38T
22	BP-4212-37	028448	Drive Gear, 36T
US GALLONS (Old Style)			
19	**BP-4212-15**	**012491**	**Control Block, 12T**
	BP-4215-26	**012490**	**Control Block, Bronze, 12T**
20	**BP-4212-36**	**028168**	**Cluster Gear, 12T-39T**
21	**BP-4212-38**	**028172**	**Cluster Gear, Gas, 15T-38T**
	call for details	**028173**	**Cluster Gear, Dsl, 15T-39T**
22	**BP-4215-27**	**028450**	**Drive Gear, Gas, 37T**
	call for details	**028465**	**Drive Gear, Dsl, 38T**
IMPERIAL GALLONS (New Style)			
19	**BP-4212-15**	**012491**	**Control Block, 12T**
	BP-4215-26	**012490**	**Control Block, Bronze, 12T**
20	**BP-4212-36**	**028168**	**Cluster Gear, 12T-39T**
21	**call for details**	**028449**	**Drive Gear, Gas, 37T**
22	**BP-4219-11**	**028174**	**Cluster Gear, 13T-39T**
IMPERIAL GALLONS (Old Style)			
19	**BP-4212-15**	**012491**	**Control Block, 12T**
	BP-4215-26	**012490**	**Control Block, Bronze, 12T**
20	**BP-4212-36**	**028168**	**Cluster Gear, 12T-39T**
21	**BP-4219-11**	**028174**	**Cluster Gear, 13T-39T**
22	**call for details**	**028449**	**Drive Gear, Gas, 37T**
	call for details	**028163**	**Drive Gear, Dsl, 39T**
LITER MEASURE (New Style)			
19	**BP-4212-15**	**012491**	**Control Block, 12T**
	BP-4215-26	**012490**	**Control Block, Bronze, 12T**
20	BP-4212-38	028172	Cluster Gear, Gas, 15T-38T
21	call for details	028175	Cluster Gear, 29T-36T
22	call for details	028151	Drive Gear, Dsl, 25T
LITER MEASURE (Old Style)			
19	**BP-4212-15**	**012491**	**Control Block, 12T**
	BP-4215-26	**012490**	**Control Block, Bronze, 12T**
20	**BP-4212-38**	**028172**	**Cluster Gear, Gas, 15T-38T**
	call for details	**028173**	**Cluster Gear, Dsl, 15T-39T**
21	**call for details**	**028175**	**Cluster Gear, 29T-36T**
22	**call for details**	**028171**	**Drive Gear, Dsl, 26T**
	call for details	**028151**	**Drive Gear, Gas, 25T**

NOTE: Due to meter redesign, meters manufactured after May 10, 1995, use the New Style change gears. Older meters use the Old Style change gears.

All names, numbers, symbols and descriptions are used for reference purposes only. It is not implied that any part listed is the product of these manufacturers.

Entire contents copyright © 2022 SVI International, Inc.

4860 - Specific Meter Model Configurations

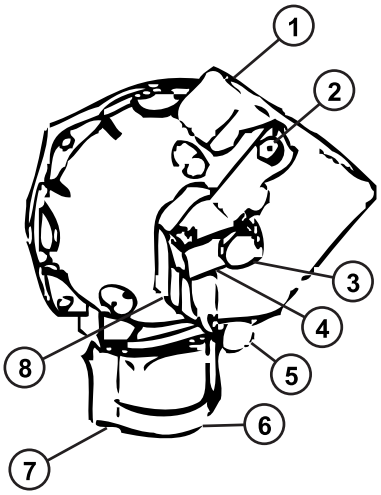

Model 4860-7A / OEM # 035867
For Hand Pump Applications
Hose drain valve body equipped with vacuum breaker to permit easy draining of hose and prevent siphoning on above-ground tank applications. Nozzle boot and hook provided to hang up hand pump nozzle.
1" NPT inlet; 3/4" NPT outlet.

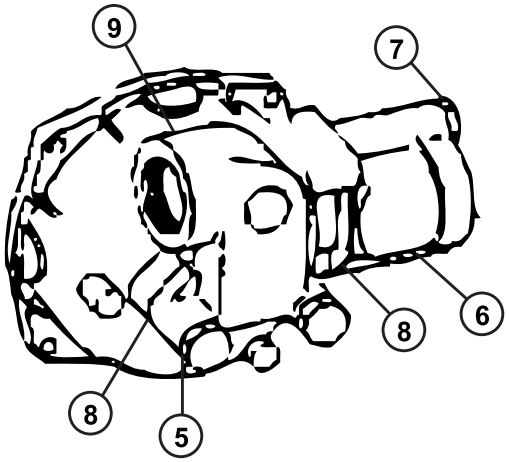

Model 4860-4D / OEM # 035882
For Straight Piping Applications
Register can be oriented to any of four 90° positions for proper reading to conform to vertical or horizontal straight piping requirements.
1" NPT inlet and outlet.

Item	SVI Part #	OEM #	Description
1	call for details	003235	Hose Drain Valve Body
2	BP-4211-23	066570	Vacuum Breaker
3	call for details	K01904	Body & Nozzle Hook Screw
4	call for details	030205	Nozzle Hook
5	BP-4212-111	K04395	Discharge Screw
6	call for details	003650	Inlet Flange, 1"
7	call for details	Q10624 31	Inlet Flange Screw

Item	SVI Part #	OEM #	Description
8	BP-4210-20	M05618B001	Gasket
9	BP-4215-17	003560	Discharge Flange, 1"
10	BP-4212-111	K04395	Discharge Flange Screw
11	BP-4212-110	003542	Discharge, 3/4", Vacuum Breaker
12	call for details	K47659	Inlet Flange Screw
13	BP-4212-112	003597	Inlet Flange, 3/4", 15°

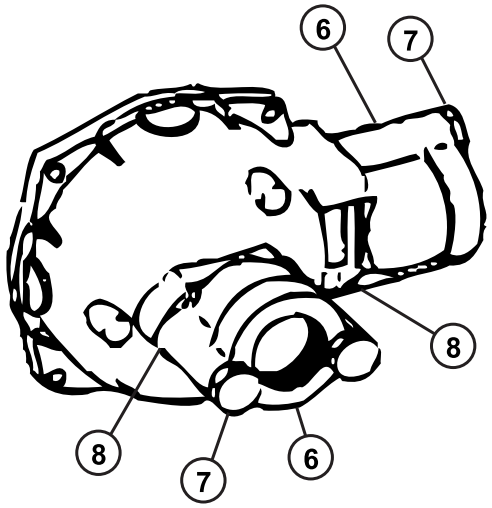

Model 4860-4E / OEM # 035888
For 90° Turn Piping Applications
Register can be oriented to any of 90° positions for proper reading to conform to piping requirements.
1" NPT inlet and outlet.

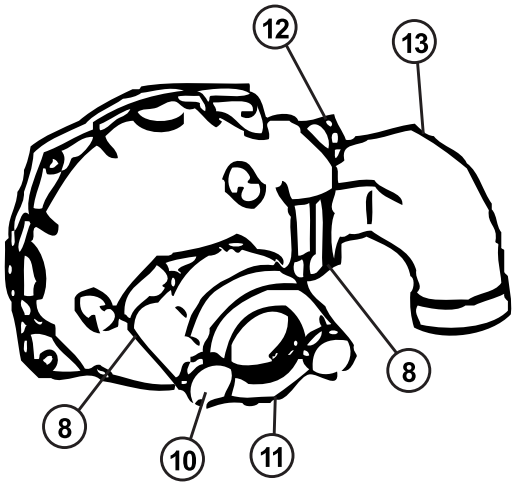

Model 4860-4F / OEM # 035936
For Electric Pump Applications
Inlet flange offset to tip register back 15° from vertical for convenient reading. Discharge flange angled at 30° to prevent hose kink at coupling. 3/4" NPT inlet and outlet.

All names, numbers, symbols and descriptions are used for reference purposes only. It is not implied that any part listed is the product of these manufacturers.

Entire contents copyright © 2022 SVI International, Inc.

4860 Meter Repair Kit

Item	SVI Part #	OEM #	Description
KIT	**BP-4212-03**	033026	**4860 Meter Repair Kit**
1	BP-4210-30KP	S00758	Register and Glass Assembly
2	BP-4210-20	M05618B001	Gasket, Inlet-Outlet
3	BP-4214-05	027355	Gasket, Strainer Cover
4	BP-4210-50	036995	Meter Parts-Stuffing Box
5	BP-4210-49	048895	O-Ring, 5/16 x 7/16
6	BP-4212-19	049075	O-Ring, 4-5/8 x 4-7/8
7	BP-4212-32	049390	E-Ring, 5-33-15
8	BP-4210-48	048865	O-Ring, 5/32 x 9/32
9	BP-4210-40	014095	Bearing, Seal-Stuffing Box
10	BP-4212-17	011816	Bearing
11	BP-4212-18	017269	Reset Button
12	BP-4210-47	031345	Key, Spring
13	BP-4212-16	057985	Setback Spring

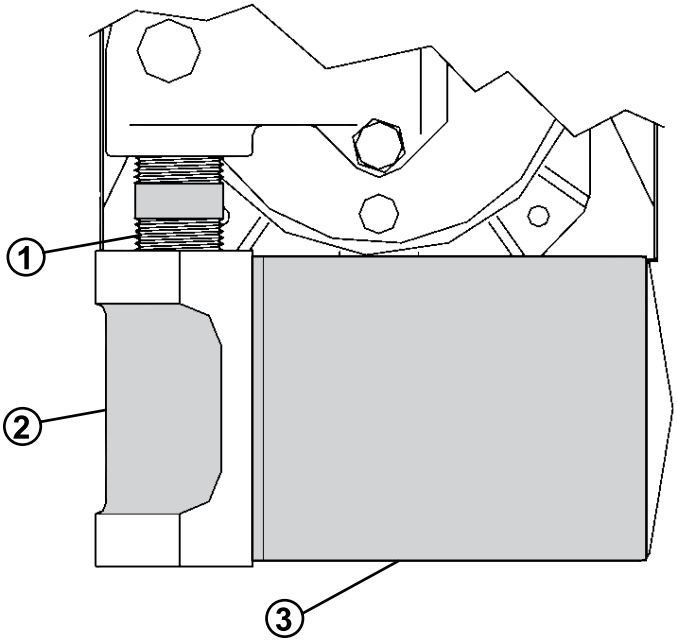

4860 Meter Breakdown—Filter

Item	SVI Part #	OEM #	Description
1	call for details	R11495 46	Pipe, 1 x 1-3/4"
2	call for details	003044	Filter Adapter, 1"
3	call for details	026005	Filter, 7 Micron, Particulate only
	call for details	026015	Filter, 30 Micron, Water and Particulate
	call for details	026042	Filter, 10 Micron, Water and Particulate
	call for details	025909	Filter, 1 Micron, Particulate only, Methanol

All names, numbers, symbols and descriptions are used for reference purposes only. It is not implied that any part listed is the product of these manufacturers.

TERMS AND CONDITIONS OF THE
SALES ORDER
FOR SVI INTERNATIONAL, INC.

1. **GENERAL**. The terms and conditions of sales order outlined herein shall apply to the sale by SVI INTERNATIONAL, INC. (hereinafter referred to as "Company") of the items described on the facing page (hereinafter referred to as "Merchandise") to Purchaser.
2. **DELIVERY**. Delivery shall be deemed to be complete when the Merchandise has been shipped F.O.B. Company's plants in DeKalb, Illinois, Montclair, California; and Hanover, Maryland ("Company's plants"). Shipments are subject to delays from causes or contingencies beyond the reasonable control of the Company. When otherwise not specified, shipments will be made in standard containers via carrier which, in the judgment of the Company, will result in the most practical method. Title and right of possession will pass to the Purchaser upon receipt by the carrier at the shipping point. If a customer of the Company should specify a specific carrier's method of shipment (i.e. UPS Next Day Air) and that carrier does not perform to the customer's expectations, freight credit to a customer's account will not be issued unless the Company can first obtain a credit.
3. **RISK OF LOSS**. Identification of the Merchandise under Uniform Commercial Code (hereinafter referred to as "UCC") Section 2-501 shall take place at the moment of shipment F.O.B. Company's plants. Risk of loss shall pass to the Purchaser when the Merchandise is shipped from the Company's plants.
4. **TITLE**. Title to the merchandise shall transfer to the Purchaser when the Merchandise is shipped from the Company's plants.
5. **WARRANTIES**. The Company guarantees its products to be free from defects in workmanship and raw materials for a period of one year from date of purchase. THIS WARRANTY IS EXPRESSLY IN LIEU OF ANY AND ALL WARRANTIES EXPRESS OR IMPLIED. COMPANY DOES NOT WARRANT THE MERCHANDISE IS MERCHANTABLE OR FIT FOR ANY PARTICULAR PURPOSE. Company's liability for breach of the terms of this Agreement, including any warranty, is limited to either refund of the invoice price of the Merchandise or at Company's option, replacement of the Merchandise free of charge, including transportation charges but not including the cost of labor. Purchaser has not relied on any statement or upon the conduct of Company with respect to the prospective use of the merchandise. Company shall not be liable for and Purchaser waives any and all claims for any loss or damage, directly or indirectly, arising from the use of the Merchandise and for punitive, incidental or consequential damages, including, but not limited to, damages to property, for loss of use, loss of time, loss of profit or loss of income. The Company does not authorize the sale of our products under any other warranty, expressed or implied. **Please note:** Electrical components and cylinder or shaft seals are not covered under warranty.
6. **SETOFF**. All claims for money due or to become due from the Company shall be subject to deduction by the Company for any setoff or counterclaim arising out of this or any other claims of the Company or its affiliated companies, whether such setoff or counterclaim arose before or after any assignment by Purchaser.
7. **INDEMNIFICATION**. Purchaser agrees to indemnify the Company and hold it harmless from and against all claims, liability, loss, damage or expense, including reasonable counsel fees, arising from or by reason of any modifications or alterations made by Purchaser. If a customer of the Company modifies or alters any part, in any manner whatsoever, or uses any part in departure from recommended performance specifications, said customer agrees to indemnify and hold the Company harmless from and against all liability and expenses based on damage to property or injury to or death of any person arising out of or attributable to such modified or altered part. Further, the Company will not accept any such modified or altered part for credit to a customer's account.
8. **FREIGHT POLICY**. Freight charges are prepaid and added to invoice or collect FOB shipping point. Note: All customers are responsible for all carrier shipping costs, fees, surcharges, etc. including order refusal and return fees.
9. **RETURN POLICY**. To return a part for credit or inspection, Purchaser must first contact our Main Office in Illinois, to obtain a Return Merchandise Form. Once Purchaser has obtained this form, the parts can be returned freight prepaid only. The Return form must be included with the shipment. Parts returned to the Company without the approved form will be returned freight collect to the shipper or refused. Returns must be initiated within 30 days of the invoice date. The Return Forms are valid for 30 days, from the date of issue. All Returns are subject to restocking charges. Return parts brought into our remote warehouses, will not be accepted by our personnel, without a Return Merchandise Form from the Main Office. Parts which have been used in any way or manner, including any installation or incorporation into a lift, hoist, or other equipment, shall NOT be eligible for return whether or not a Return form has been assigned. **Please note:** Electrical parts or components are not returnable for credit. This includes all switches, pushbuttons, relays, electric motors, capacitors, fuses, solenoids, power units with wiring issues or any other electrical items. Custom, built to order, special order, and non-stocked genuine parts are non-returnable.
10. **RESTOCK CHARGE**. Returns are subject to a restocking charge. Refusals are subject to the same restocking charge plus the cost of outbound and return freight charges and/or fees incurred by the Company due to shipment refusal.
11. **PRICES AND PAYMENTS**. All prices are subject to change without notice. All prices are F.O.B. shipping point. The Company standard terms are net 30 days, C.O.D. company check, C.O.D. cash, VISA, MasterCard, Discover or American Express. However, if in the judgment of the Company, the financial condition of the Purchaser at any time does not justify shipment according to standard terms of payment, the Company may require full or partial payment in advance.
12. **INTERPRETATION**. This sales order is intended by the parties as a complete and exclusive statement of the terms of their agreement. It supersedes all prior agreements, written or oral. No course of prior dealings between the parties and no usage of the trade shall be relevant to supplement or explain any terms used in this sales order. Acceptance or acquiescence in a course of performance rendered under this purchase order shall not be relevant to determine the meaning of this sales order even though the accepting or acquiescing party has knowledge of the nature of the performance and opportunity for objection. Whenever a term defined by the UCC is used in this sales order the definition contained in the UCC shall control.
13. **MODIFICATION**. This sales order can be modified or rescinded only by a writing signed by both parties.
14. **WAIVER**. No claim or right arising out of a breach of this sales order can be discharged in whole or in part by a waiver or renunciation of the claim or right unless such waiver or renunciation is supported by consideration and is in writing signed by the aggrieved party.
15. **ASSIGNMENT**. No right or interest in this sales order shall be assigned by either party without the written consent of the other and no delegation of any obligation owed, or of the performance of any obligation by either the Company or Purchaser shall be made without the written consent of the other party. Any attempted assignment or delegation not made in conformity with this paragraph shall be wholly void and totally ineffective for all purposes.
16. **TIME TO PERFORM AND BRING ACTION**. Time is of the essence of this sales order. Any action for breach of this sales order shall be commenced within two (2) years after the cause of action has accrued. Any party who loses any litigation shall reimburse the other party for costs including reasonable attorney's fees. The exclusive jurisdiction for any legal action shall be the Circuit Court of DeKalb County, Illinois.
17. **APPLICABLE LAW**. This sales order shall be governed by the UCC of Illinois as effective and in force on the date of this sales order.

SVI IS YOUR ANSWER!

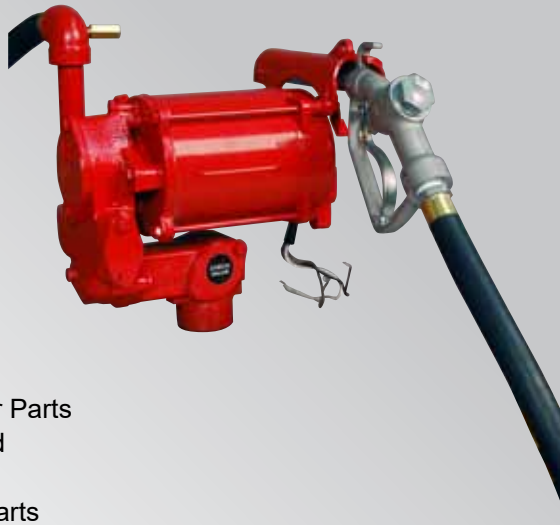

- Air System and Compressor Parts
- Auto Lift Parts for Any Brand
- Auto Lift Cables and Chain
- Auto Lift Power Units and Parts
- Auto Lift Sheaves / Pulleys and Chain Rollers
- Brake Lathes Repair Parts for All Makes
- Exhaust System Products
- Fluid Delivery Repair Parts
- Hose Reels and Hose Stops
- In-Ground Auto Lifts
- Lubrication Equipment Repair Parts
- Petroleum / Service Station Pump and Tank Products
- RELS Brake Lathes
- Repair Parts for Gasboy Consumer Series
- SESM Lifts for ATV/UTV, Golf Cart and More!
- Tire Changer Repair Parts
- Turf Attachments for 2-Post Lifts
- Vehicle Lifting Systems
- Wheel Balancer Accessories

SVI International, Inc.
155 Harvestore Drive • DeKalb, IL 60115

800-321-8173 • 815-748-0200
Fax: 800-899-1784 • 815-748-0210

Entire contents copyright © 2022, SVI International, Inc.

Information and Catalogs Online:
www.sviinternational.com