Automotive Lift

REPAIR PARTS

Repair Parts for: Benwil

SVI International, Inc.

(800) 321-8173 • fax: (800) 899-1784

155 Harvestore Drive • DeKalb, IL 60115

www.sviinternational.com

BALTIMORE • CHICAGO • LOS ANGELES

Repair Parts for:

Benwil

LRC7200K

entire contents copyright © 2010 SVI International, Inc.

BW-9 / 9L and BWO-9 / 9L / 9H

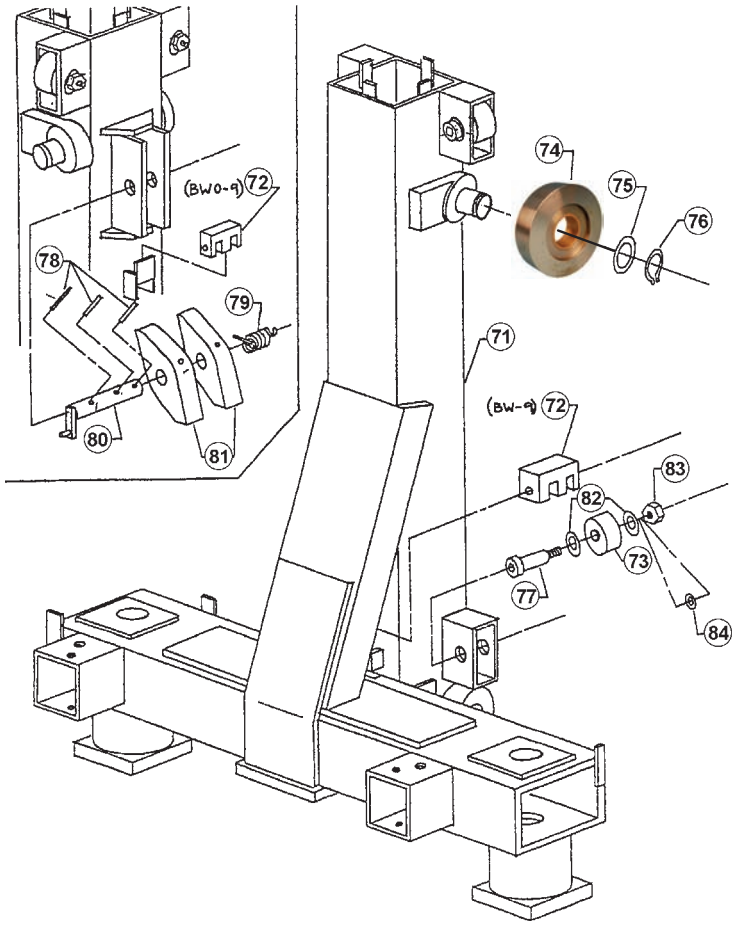

Carriage Assembly, Drive Side

Item	SVI part #	OEM #	Description	BW-9	BWO-9 9L, 9H
71	BH-7224-190	300483-1	Carr. Weld-Drive Side	1	--
	BH-7224-191	300483-3	Carr. Weld-Drive Side	--	1
72	BH-7210-56	300554	Chain Anchor	1	1
73	BH-7208-38	300382	Roller Assembly-Side	4	4
74	BH-7208-37	300607	Roller-Flange	4	4
75	BH-7202-005	300617	Thrust Washer	4	4
76	BH-7202-006	300218-8	Snap Ring	4	4
77	F-SB-0625-11-1500	5/8" x 1-1/2"	Socket Shoulder Screw	4	4
78	F-RP-156-1500	5/32" x 1-1/2"	Roll Pin	3	3
79	BH-7202-93	300269	Spring-Safety Lock	1	1
80	BH-7202-91	300537	Pin Assembly	1	1
81	BH-7202-92	300612	Lock-Carriage	2	2
82	call for details	5/8" x 1-1/4"	Machine Bushing	8	8
83	F-NL-0500-13	1/2"-13	Insert Lock Nut	4	4
84	F-FW-0500-USS	1/2"	Flat Washer	4	4

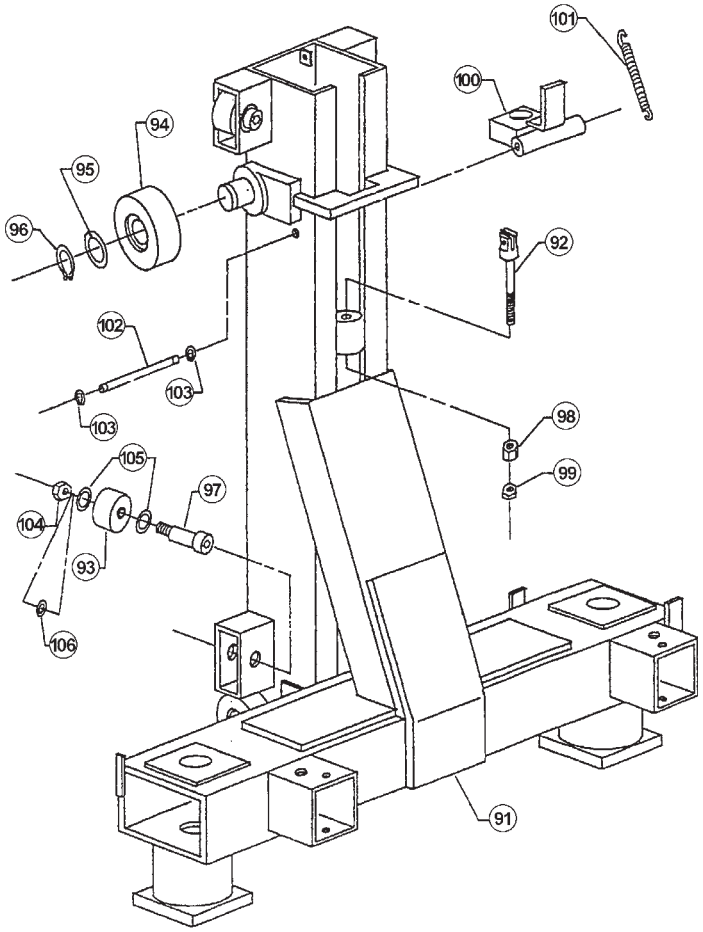

BW-9 / 9L and BWO-9 / 9L / 9H

Carriage Assembly, Driven Side

Item	SVI part #	OEM #	Description	BW-9	BWO-9 9L, 9H
91	BH-7224-192	300484	Carriage Weld-Driven	1	1
92	BH-7207-70	300553	Clevis-Chain	1	1
93	BH-7208-38	300382	Roller Assembly Side	4	4
94	BH-7208-37	300607	Roller-Flange	4	4
95	BH-7202-005	300617	Thrust Washer	4	4
96	BH-7202-006	300218-8	Snap Ring	4	4
97	F-SB-0625-11-1500	5/8" x 1-1/2"	Socket Shoulder Screw	4	4
98	F-HN-0625-18	5/8"-18	Hex Nut	1	1
99	F-JN-0625-18	5/8"-18	Jam Nut	1	1
100	BH-7202-96	300543	Lk. Weld-Loose Chain	1	1
101	BH-7202-97	300396	Spr.-Loose Chain Lk.	1	1
102	BH-7207-69	300546	Pin-Loose Chain	1	1
103	BH-7210-47	300218-11	Snap Ring	2	2
104	F-NL-0500-13	1/2"-13	Nylon Insert Lock Nut	4	4
105	call for details	5/8" x 1-1/4"	Machine Bushing	8	8
106	F-FW-0500-SAE	1/2"	Flat Washer	4	4

All names, numbers, symbols and descriptions are used for reference purposes only. It is not implied that any part listed is the product of these manufacturers; however, some parts may be the actual product of these manufacturers.

entire contents copyright © 2010 SVI International, Inc.

BW-9 / 9L and BWO-9 / 9L / 9H

Arm Lock Assembly

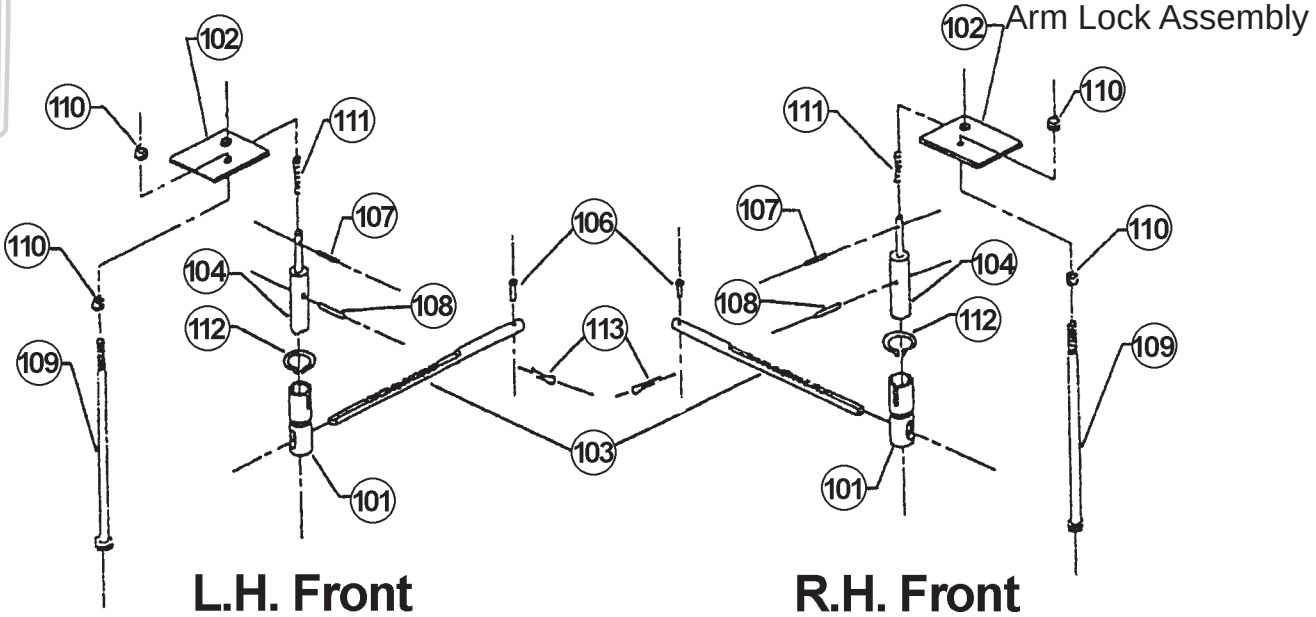

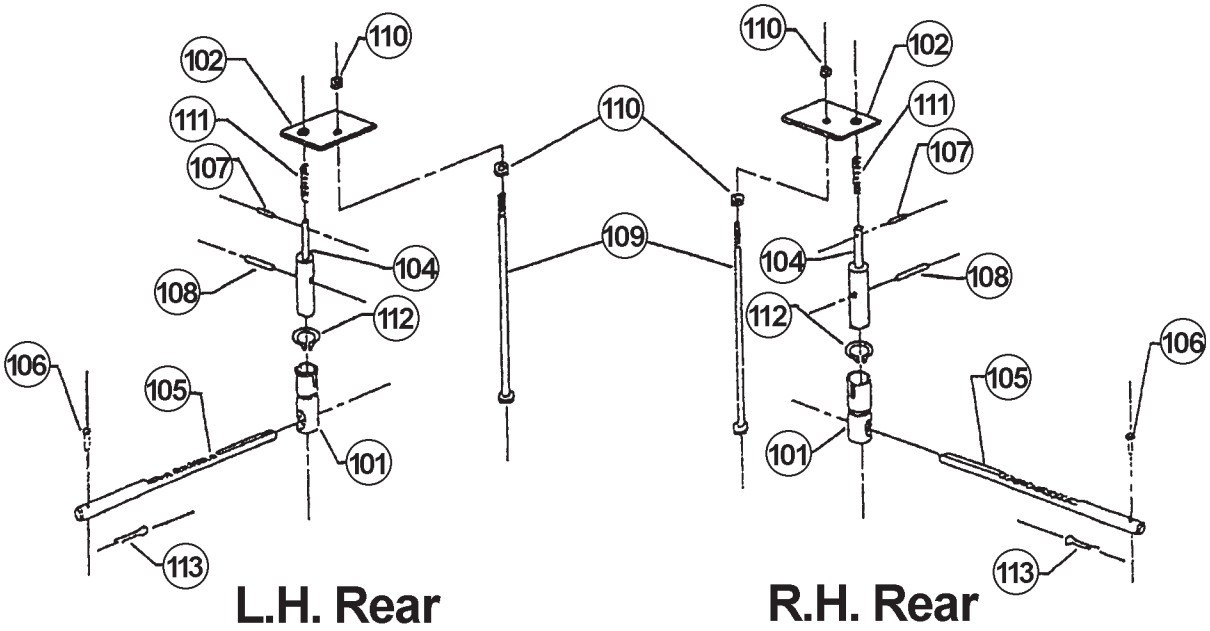

Item	SVI part #	OEM #	Description	BW-9	BWO-9 9L, 9H
101	BH-7206-50	300214	Supt. Tube-Lock Bar	4	4
102	BH-7208-27	300542	Link Arm Restraint	2	2
103	BH-7208-23	300216-7	Rest. Bar-Front Arm	2	2
104	BH-7208-02	300217	Rest. Pin-Arm	4	4
105	BH-7208-28	300216-5	Rest. Bar-Rear Arm	2	2
106	BH-7208-06	300136	Clevis Pin	4	4
107	F-RP-125-0750	1/8"x3/4"	Roll Pin	4	4
108	F-RP-187-1125	3/16"x1-1/8"	Roll Pin	4	4
109	F-HC-0375-16-8500	3/8"-16x8-1/2"	Hex Bolt	4	4
110	F-JN-0375-16	3/8"-16	Jam Nut	8	8
111	BH-7208-08	300222	Spring-Arm Lock	4	4
112	BH-7208-05	300218-2	Snap Ring	4	4
113	F-CP-125-1000	1/8" x 1"	Cotter Pin	4	4
114	BH-7208-00		Set of 4 Arm Restraint Assy. for whole lift		

All names, numbers, symbols and descriptions are used for reference purposes only. It is not implied that any part listed is the product of these manufacturers; however, some parts may be the actual product of these manufacturers.

entire contents copyright © 2010 SVI International, Inc.

BW-9 / 9L and BWO-9 / 9L / 9H

Arm Assembly

Item	SVI part #	OEM #	Description	BW-9	BWO-9 9L, 9H
121	BH-7211-01	300238	Pin-Arm	4	4
122	BH-7211-02	300218-4	Snap Ring	4	4
123	BH-7224-180	300444-1	Arm Weld-Asym. Front (LH)	1	1
124	BH-7211-01	300428	Arm Ext. Weld-Front	2	2
125	BH-7224-181	300444-2	Arm Weld-Asym. Front (RH)	1	1
126	BH-7207-63	300418-1	Arm Weld-Rear (LH)	1	1
127	BH-7207-03	300426	Arm Ext. Weld-Rear	2	2
128	BH-7207-64	300418-2	Arm-Weld-Rear (RH)	1	1
129	F-HC-0312-18-0500	5/16"-18x1/2"	Hex Bolt	4	4
130	call for details	3/8" x 1/32"	Aluminum Washer	4	4
131	F-HC-0375-16-0500	3/8"-16x1/2"	Hex Bolt	4	4
132	BH-7208-66B	100967	Lift Adapter Assembly	4	4
135	BH-7207-01	101086	Height Extension, OE Style		

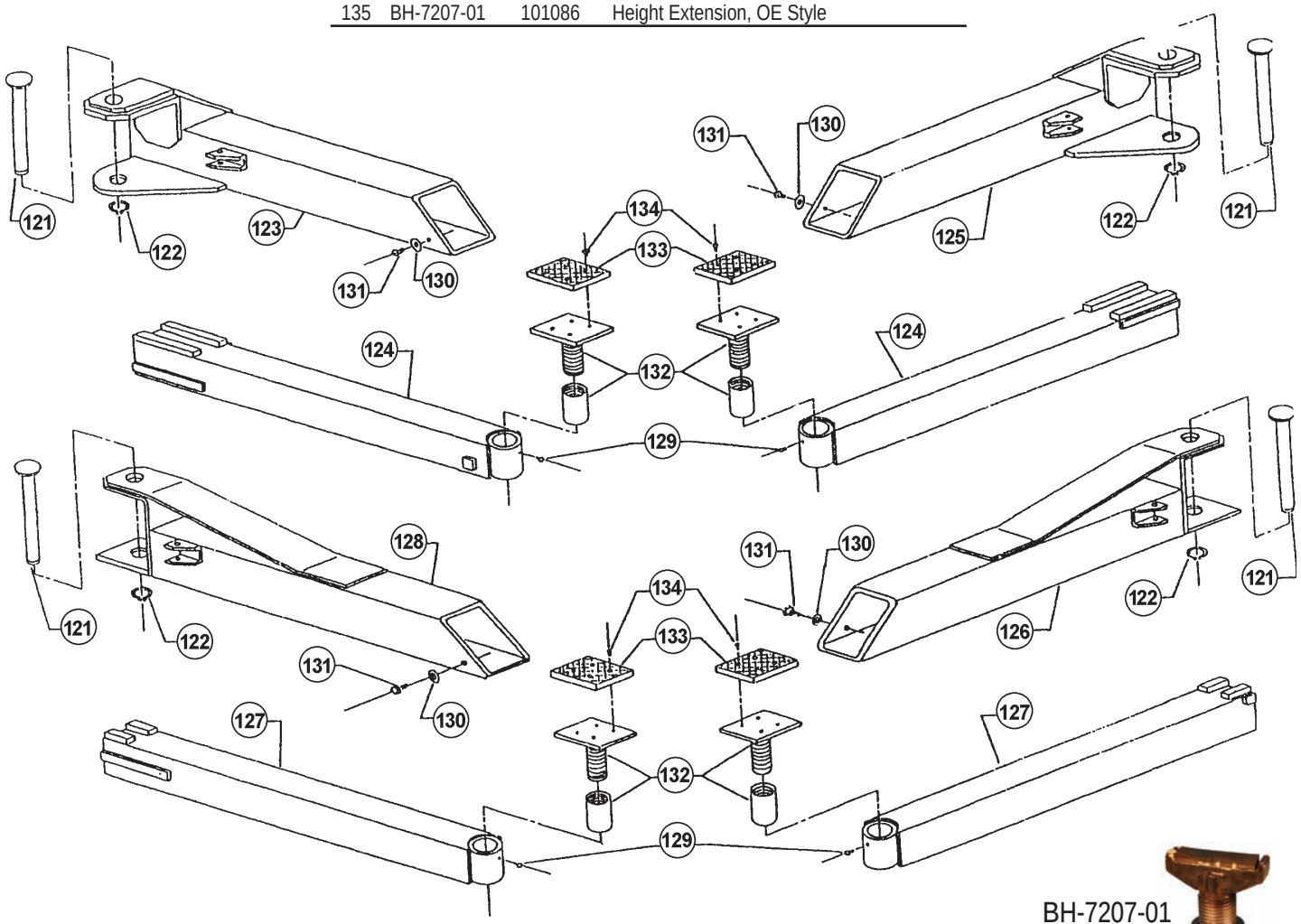

BH-7207-01

All names, numbers, symbols and descriptions are used for reference purposes only. It is not implied that any part listed is the product of these manufacturers; however, some parts may be the actual product of these manufacturers.

entire contents copyright © 2010 SVI International, Inc.

BWO-9

Overhead Beam Assembly

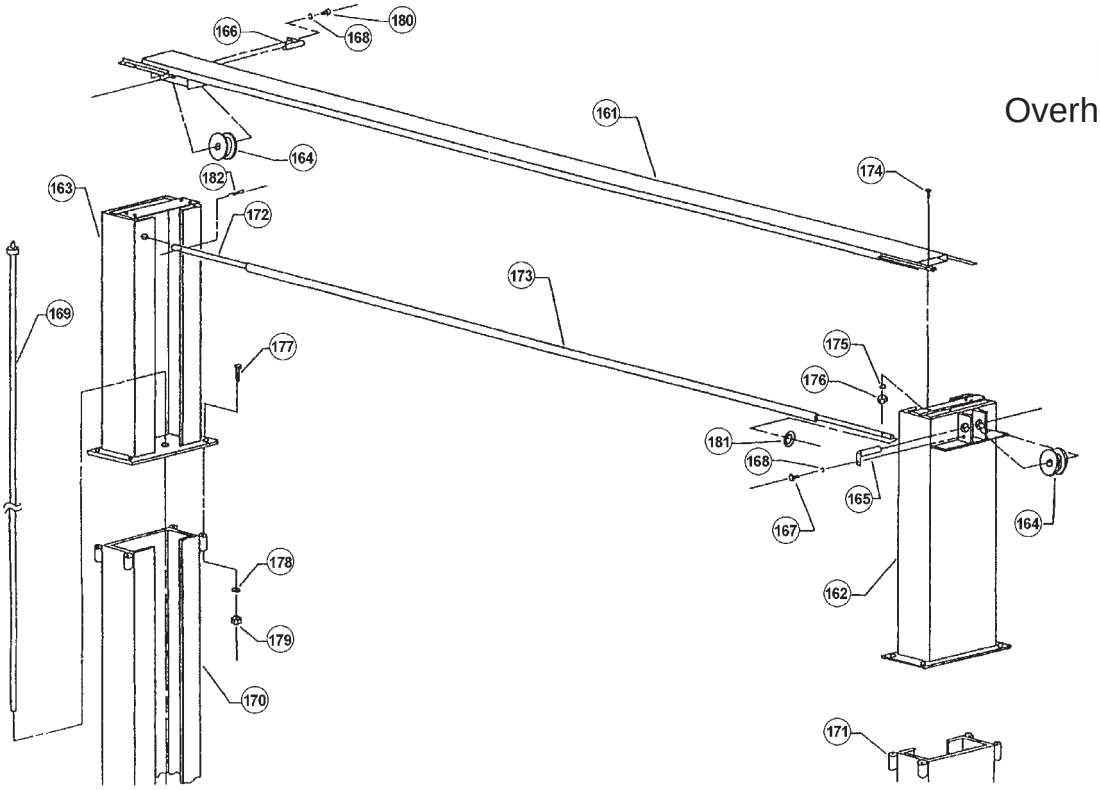

Item	SVI part #	OEM #	Description	Qty
161	BH-7224-197	300518	Overhead Beam	1
162	BH-7224-198	300533	Upper Column Drive Side	1
163	BH-7224-199	300532	Upper Column Driven Side	1
164	BH-7208-46	300468	Sheave	2
165	BH-7210-57	300559	Axle-Sheave	1
166	BH-7210-58	300560	Axle-Sheave	1
167	F-HC-0250-20-0375	1/4"-20 x 3/8"	Hex Bolt	1
168	F-LW-0250	1/4"	Split Lock Washer	2
169	BH-7202-95	300300	Rod Assembly-Restraint	1
170	call for details	300517-1	Column Driven Side	1
171	call for details	300516-1	Column Drive Side	1

Item	SVI part #	OEM #	Description	Qty
172	BH-7224-176	300470-3	Conduit	1
173	BH-7210-15	300281	Foam Tubing	1
174	F-HC-0375-16-1250	3/8"-16x1-1/4"	Hex Bolt	8
175	F-LW-0375	3/8"	Split Lock Washer	8
176	F-HN-0375-16	3/8"-16	Hex Nut	8
177	F-HC-0500-13-2500	1/2"-13x2-1/2"	Hex Bolt	8
178	F-LW-0500	1/2"	Split Lock Washer	8
179	F-HN-0500-13	1/2"-13	Hex Nut	8
180	F-HC-0250-20-0500	1/4"-20x1/2"	Hex Head Bolt	1
181	F-FW-0375-SAE	3/4"	Flat Washer	1
182	F-CP-125-1000	1/8" x 1"	Cotter Pin	2

BWO-9L / 9H

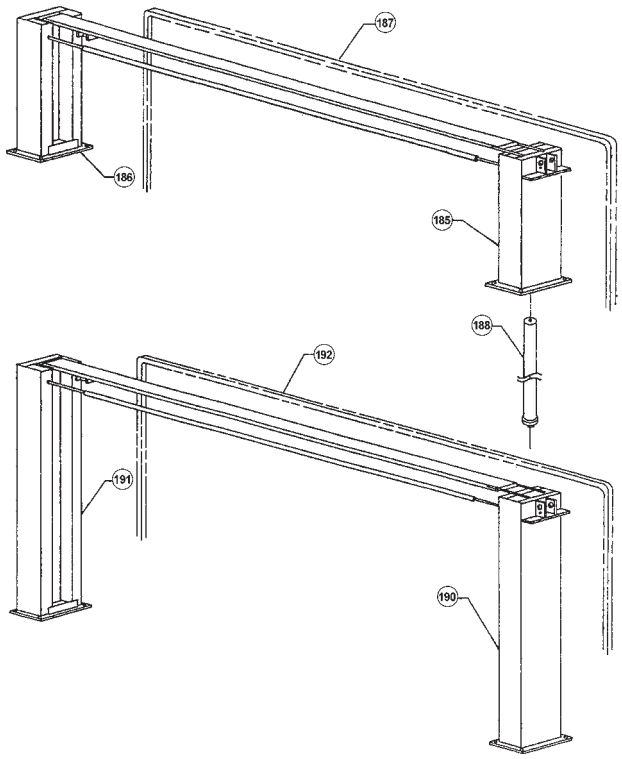

BWO-9L Overhead Beam Assembly

Item	SVI part #	OEM #	Description	Qty
185	BH-7224-202	300669	Upper Column Drive Side	1
186	BH-7224-204	300532-5	Upper Column Driven Side	1
187	BH-7224-205	300469-7	Leaf Chain-501 Links	1
188	BH-7224-206	300677	Hydraulic Cylinder	1

BWO-9H Overhead Beam Assembly

Item	SVI part #	OEM #	Description	Qty
190	BH-7224-207	300666	Upper Column Drive Side	1
191	BH-7224-208	300532-3	Upper Column Driven Side	1
192	BH-7224-203	300469-5	Leaf Chain-572 Links	1

All names, numbers, symbols and descriptions are used for reference purposes only. It is not implied that any part listed is the product of these manufacturers; however, some parts may be the actual product of these manufacturers.

entire contents copyright © 2010 SVI International, Inc.

BWO-9 / 9L / 9H

Assembly

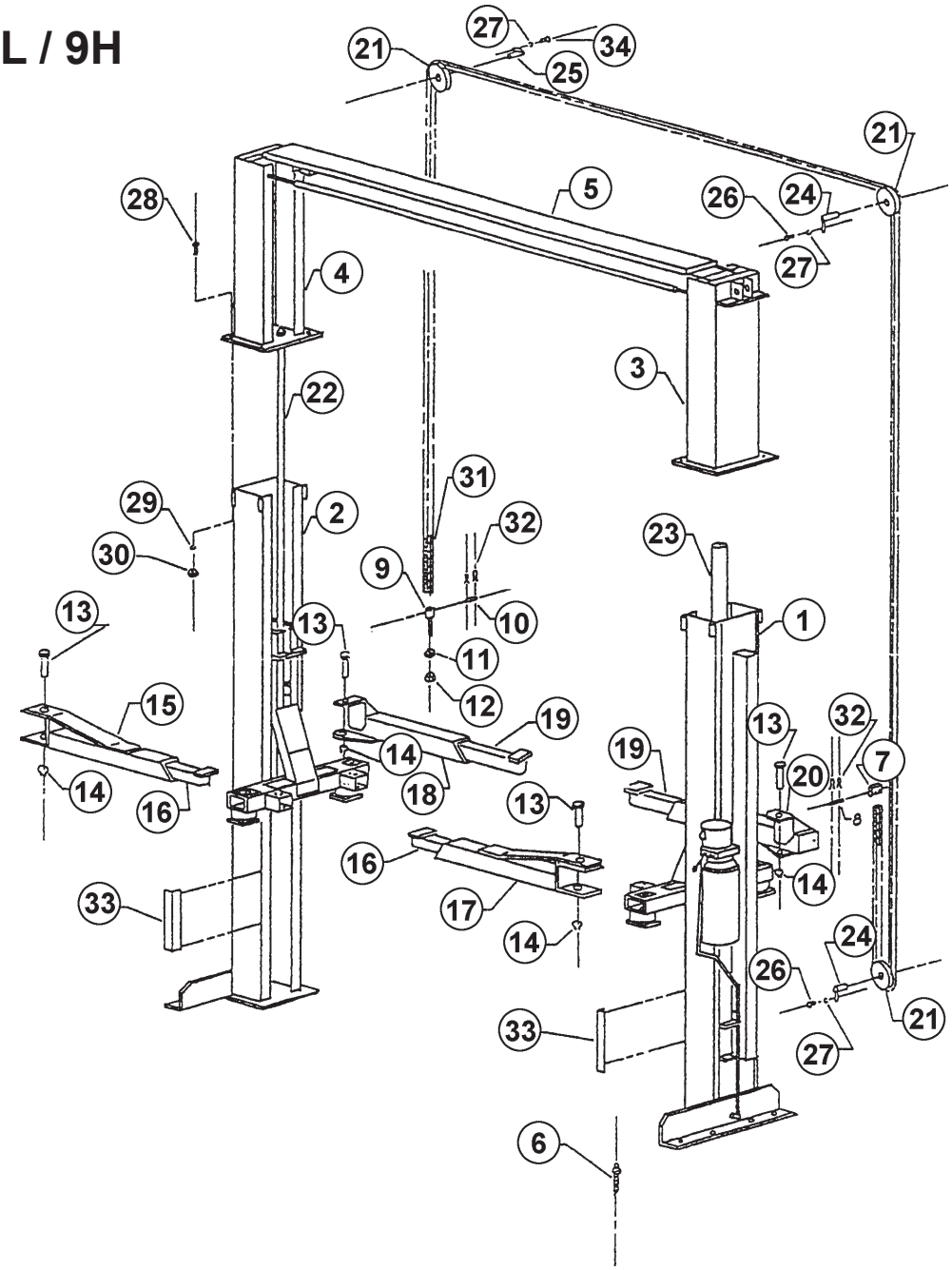

Item	SVI part #	OEM #	Description	Qty
1	BH-7224-195	300516-1	Column-Drive Side	1
2	BH-7224-200	300517-1	Column-Driven Side	1
3	BH-7224-198	300533	Upper Column-Drive Side	1
4	BH-7224-199	300532	Upper Column-Driven Side	1
5	BH-7224-197	300518	Overhead Beam	1
6	BH-7224-131	500388	Anchor Bolt Assembly	8
7	BH-7210-56	300554	Anchor-Chain	1
8	BH-7210-52	300346	Pin-Anchor Chain	1
9	BH-7207-70	300553	Clevis-Chain	1
10	BH-7207-71	300555	Pin Clevis	1
11	F-HN-0625-18	5/8"-18	Hex Nut	1
12	F-JN-0625-18	5/8"-18	Hex Jam Nut	1
13	BH-7211-01	300238	Pin-Arm Front/Rear	4
14	BH-7211-02	300218-4	Snap Ring	4
15	BH-7207-63	300418-1	Arm Weld-Rear (LH)	1
16	BH-7207-03	300426	Arm Weld Ext.-Rear	2
17	BH-7207-64	300418-2	Arm Weld-Rear (RH)	1
18	BH-7224-180	300444-1	Arm Weld-Asym. Front (LH)	1

Item	SVI part #	OEM #	Description	Qty
19	BH-7211-11	300428	Arm Weld Ext. Front	2
20	BH-7224-181	300444-2	Arm Weld-Asym. Front (RH)	1
21	BH-7208-46	300468	Sheave	3
22	BH-7202-95	300300	Rod Assembly-Restraint	1
23	BH-7224-183	300304	Hydraulic Cylinder	1
	BH-7224-206		(PN 300677 BWO-9L)	1
24	BH-7210-57	300559	Axle-Sheave	2
25	BH-7210-58	300560	Axle-Sheave	1
26	F-HC-0250-20-0375	1/4"-20 x 3/8"	Hex Bolt	2
27	F-LW-0250	1/4"	Split Lock Washer	3
28	F-HC-0500-13-2500	1/2"-13x2-1/2"	Hex Bolt	8
29	F-LW-0500	1/2"	Split Lock Washer	8
30	F-HN-0500-13	1/2"-13	Hex Nut	8
31	BH-7224-193	300469-3	Leaf Chain-513 Links	1
32	F-RP-128-0875	1/8" x 7/8"	Cotter Pin	4
33	BH-7224-195	300598	Bumper Door	2
34	F-HC-0250-20-0500	1/4"-20 x 1/2"	Hex Head Bolt	1

All names, numbers, symbols and descriptions are used for reference purposes only. It is not implied that any part listed is the product of these manufacturers; however, some parts may be the actual product of these manufacturers.

entire contents copyright © 2010 SVI International, Inc.

BWO-9 / 9L / 9H

Drive Column Assembly

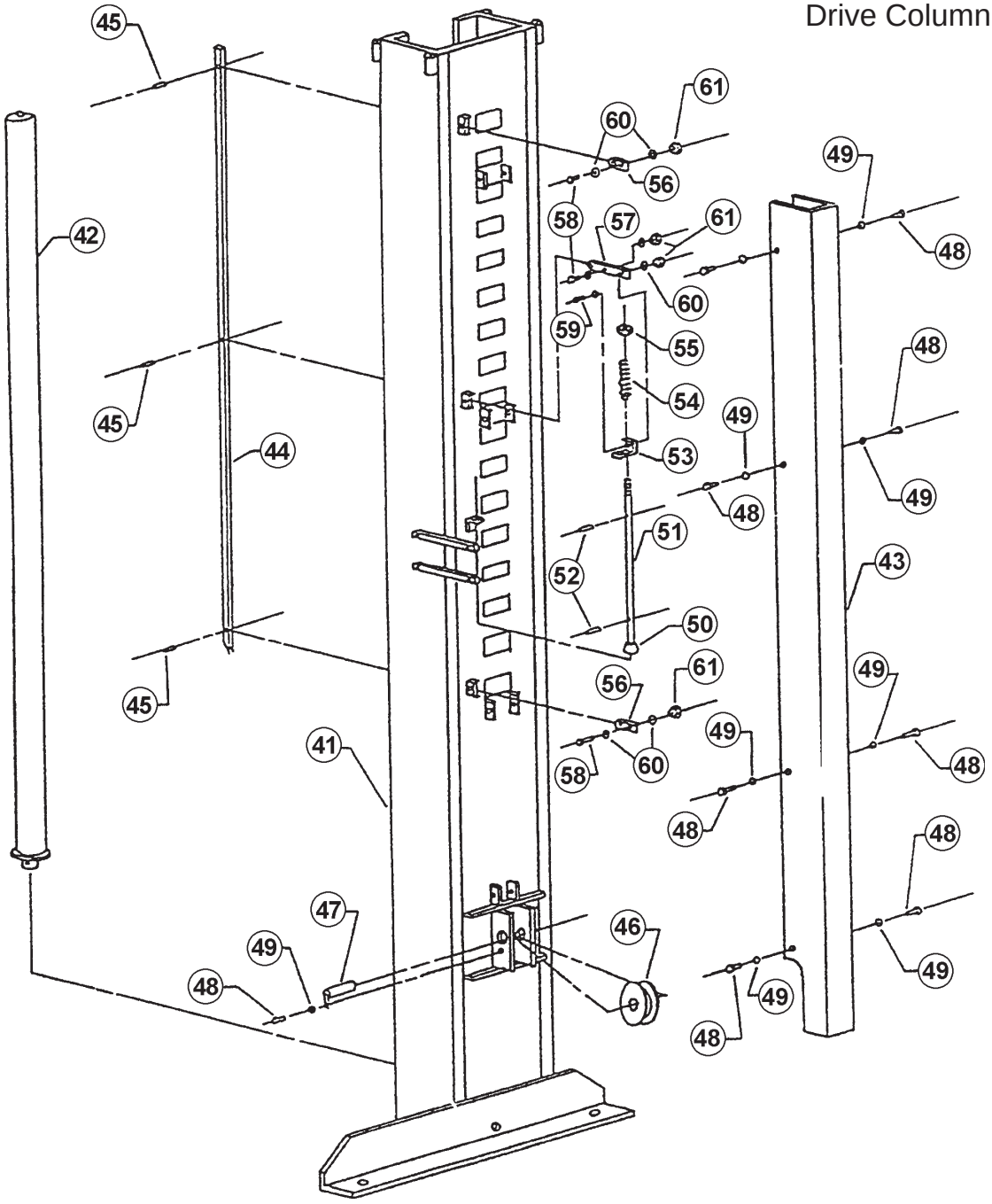

Item	SVI part #	OEM #	Description	Qty
41	BH-7224-195	300516-1	Column-Drive Side	1
42	BH-7224-183	300304	Hydraulic Cylinder	1
	BH-7224-206	300677	Cylinder for BWO-9L	1
43	BH-7224-196	300538	Cover Chain	1
44	BH-7202-90	300596	Channel Lock Release	1
45	F-RP-0187-0437	3/16" x 7/16"	Roll Pin	3
46	BH-7208-46	300468	Sheave	1
47	BH-7210-57	300559	Axle-Sheave	1
48	F-HC-0250-20-0375	1/4"-20 x 3/8"	Hex Bolt	9
49	F-LW-0250	1/4"	Split Lock Washer	9
50	BH-7208-36	300284	Knob	1

Item	SVI part #	OEM #	Description	Qty
51	BH-7202-98	300319	Rod-Lock Release	1
52	F-RP-156-0750	5/32" x 3/4"	Roll Pin	2
53	BH-7208-64	300449	Angle-Lock Release	1
54	BH-7208-09	300397	Spring-Lock Release	1
55	F-HN-0375-16	3/8"-16	Hex Nut	1
56	BH-7202-99	300178	Link-Lock Release	2
57	BH-7208-21	300450	Link-Lock Release	1
58	F-MS-0010-32-1000	10-32 x 1"	Phil. Panhd. Screw	3
59	F-MS-0010-32-0750	10-32 x 3/4"	Phil. Panhd. Screw	1
60	F-FW-0187-SAE	3/16"	Flat Washer	8
61	F-NL-0010-32	10-32	Nylon Insert Lock Nut	4

All names, numbers, symbols and descriptions are used for reference purposes only. It is not implied that any part listed is the product of these manufacturers; however, some parts may be the actual product of these manufacturers.

TERMS AND CONDITIONS OF THE
SALES ORDER
FOR SVI INTERNATIONAL, INC.

1. **GENERAL**. The terms and conditions of sales order outlined herein shall apply to the sale by SVI INTERNATIONAL, INC. (hereinafter referred to as "Company") of the items described on the facing page (hereinafter referred to as "Merchandise") to Purchaser.
2. **DELIVERY**. Delivery shall be deemed to be complete when the Merchandise has been shipped F.O.B. Company's plants in DeKalb, Illinois, Duarte, California; and Baltimore, Maryland ("Company's plants"). Shipments are subject to delays from causes or contingencies beyond the reasonable control of the Company. When otherwise not specified, shipments will be made in standard containers via carrier which, in the judgment of the Company, will result in the most practical method. Title and right of possession will pass to the Purchaser upon receipt by the carrier at the shipping point. If a customer of the Company should specify a specific carrier's method of shipment (i.e. UPS Next Day Air) and that carrier does not perform to the customer's expectations, freight credit to a customer's account will not be issued unless the Company can first obtain a credit.
3. **RISK OF LOSS**. Identification of the Merchandise under Uniform Commercial Code (hereinafter referred to as "UCC") Section 2-501 shall take place at the moment of shipment F.O.B. Company's plants. Risk of loss shall pass to the Purchaser when the Merchandise is shipped from the Company's plants.
4. **TITLE**. Title to the merchandise shall transfer to the Purchaser when the Merchandise is shipped from the Company's plants.
5. **WARRANTIES**. The Company guarantees its products to be free from defects in workmanship and raw materials for a period of one year from date of purchase. THIS WARRANTY IS EXPRESSLY IN LIEU OF ANY AND ALL WARRANTIES EXPRESS OR IMPLIED. COMPANY DOES NOT WARRANT THE MERCHANDISE IS MERCHANTABLE OR FIT FOR ANY PARTICULAR PURPOSE. Company's liability for breach of the terms of this Agreement, including any warranty, is limited to either refund of the invoice price of the Merchandise or at Company's option, replacement of the Merchandise free of charge, including transportation charges but not including the cost of labor. Purchaser has not relied on any statement or upon the conduct of Company with respect to the prospective use of the merchandise. Company shall not be liable for and Purchaser waives any and all claims for any loss or damage, directly or indirectly, arising from the use of the Merchandise and for punitive, incidental or consequential damages, including, but not limited to, damages to property, for loss of use, loss of time, loss of profit or loss of income. The Company does not authorize the sale of our products under any other warranty, expressed or implied.
6. **SETOFF**. All claims for money due or to become due from the Company shall be subject to deduction by the Company for any setoff or counterclaim arising out of this or any other claims of the Company or its affiliated companies, whether such setoff or counterclaim arose before or after any assignment by Purchaser.
7. **INDEMNIFICATION**. Purchaser agrees to indemnify the Company and hold it harmless from and against all claims, liability, loss, damage or expense, including reasonable counsel fees, arising from or by reason of any modifications or alterations made by Purchaser. If a customer of the Company modifies or alters any part, in any manner whatsoever, or uses any part in departure from recommended performance specifications, said customer agrees to indemnify and hold the Company harmless from and against all liability and expenses based on damage to property or injury to or death of any person arising out of or attributable to such modified or altered part. Further, the Company will not accept any such modified or altered part for credit to a customer's account.
8. **FREIGHT POLICY**. Freight charges on individual orders less than $3,000 in net value are prepaid and added to invoice or collect F.O.B. shipping point. Freight charges (standard ground service and continental US only) on individual orders more than $3,000 net value are paid by the Company F.O.B. shipping point. Note: customers with C.O.D. terms are responsible for all carrier C.O.D. fees regardless of order net value.
9. **RETURN POLICY**. To return parts for credit or inspection Purchaser must first contact the Company to obtain a Return Goods Authorization number (RGA#). Once Purchaser has obtained an RGA# the parts can be returned freight prepaid only. The RGA# must be on the outside of the container in a highly visible location. All parts must be returned freight prepaid and the shipment must include a letter of explanation giving the specific reason for return including details as to the conditions under which the part or parts operated. Note: parts returned without an RGA#, freight collect or without written explanation may be refused. Parts which have been used in any way or manner, including any installation or incorporation into a lift or hoist, shall NOT be eligible for return whether or not an RGA has been assigned.
10. **RESTOCK CHARGE**. Returns are subject to up to twenty-five (25%) restocking charge. Refusals are subject to the same restocking charge plus the cost of outbound and return freight charges and/or fees incurred by the Company due to shipment refusal.
11. **PRICES AND PAYMENTS**. All prices are subject to change without notice. All prices are F.O.B. shipping point. The Company standard terms are net 30 days, C.O.D. company check, C.O.D. cash, VISA, MasterCard, Discover or American Express. However, if in the judgment of the Company, the financial condition of the Purchaser at any time does not justify shipment according to standard terms of payment, the Company may require full or partial payment in advance.
12. **INTERPRETATION**. This sales order is intended by the parties as a complete and exclusive statement of the terms of their agreement. It supersedes all prior agreements, written or oral. No course of prior dealings between the parties and no usage of the trade shall be relevant to supplement or explain any terms used in this sales order. Acceptance or acquiescence in a course of performance rendered under this purchase order shall not be relevant to determine the meaning of this sales order even though the accepting or acquiescing party has knowledge of the nature of the performance and opportunity for objection. Whenever a term defined by the UCC is used in this sales order the definition contained in the UCC shall control.
13. **MODIFICATION**. This sales order can be modified or rescinded only by a writing signed by both parties.
14. **WAIVER**. No claim or right arising out of a breach of this sales order can be discharged in whole or in part by a waiver or renunciation of the claim or right unless such waiver or renunciation is supported by consideration and is in writing signed by the aggrieved party.
15. **ASSIGNMENT**. No right or interest in this sales order shall be assigned by either party without the written consent of the other and no delegation of any obligation owed, or of the performance of any obligation by either the Company or Purchaser shall be made without the written consent of the other party. Any attempted assignment or delegation not made in conformity with this paragraph shall be wholly void and totally ineffective for all purposes.
16. **TIME TO PERFORM AND BRING ACTION**. Time is of the essence of this sales order. Any action for breach of this sales order shall be commenced within two (2) years after the cause of action has accrued. Any party who loses any litigation shall reimburse the other party for costs including reasonable attorneys fees. The exclusive jurisdiction for any legal action shall be the Circuit Court of DeKalb County, Illinois.
17. **APPLICABLE LAW**. This sales order shall be governed by the UCC of Illinois as effective and in force on the date of this sales order.

Offering the Best in Automotive Lift Repair Parts and More!

Auto Lift Cables • Auto Lift Parts • Brake Lathe Repair Parts

Compressed Air Repair Parts • Exhaust System Products • Fluid Delivery Repair Parts

Lubrication Equipment Repair Parts • Repair Parts for Gasboy Consumer Series

Service Station Pump and Tank Products • SVI Misc Auto Lift Products and Catalogs

Tire Changer Repair Parts • Vehicle Lifting Systems • Wheel Balancer Accessories

Serving the Industry Since 1977 • Same-Day Shipping

SVI International, Inc.

(800) 321-8173 • fax: (800) 899-1784

155 Harvestore Drive • DeKalb, IL 60115

www.sviinternational.com

BALTIMORE • CHICAGO • LOS ANGELES

While the utmost care has been used in compiling this reference material, we assume no responsibility for errors. Specifications are subject to change without notice. This edition supersedes all previous editions or issues. SVI reference material is subject to change without notice. All rights reserved.